DEPT OF BLDGS121185760 Job Number
ES216213181 Scan Code

FOCUS LIGHTING

MANHATTAN WEST RESIDENTIAL - AMENITIES

NEW YORK, NY

BULLETIN 2

OCTOBER 23, 2014

ARCHITECTURAL LIGHTING SPECIFICATION NOTES
LIGHTING FIXTURE SCHEDULE
LIGHTING FIXTURE CATALOG CUTS
LIGHTING LOAD SCHEDULE
LIGHTING CONTROL CATALOG CUTS
LIGHTING CONTROL RISER DIAGRAM

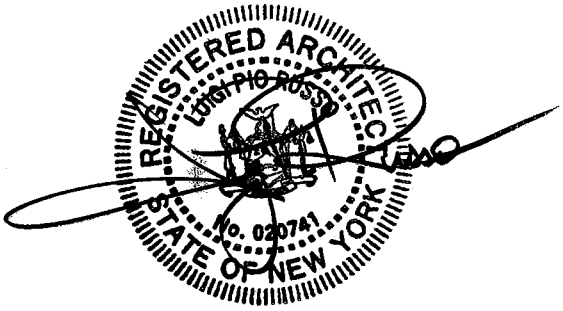

221 WEST 116TH STREET NEW YORK, N.Y. 10026-2409 TEL: (212)865-1565 FAX:(212)865-4217

ARCHITECTURAL LIGHTING SPECIFICATION NOTES

F:\Manhattan West Residential Project\03-Specifications\03-Fixture & Control Specs\Architectural Lighting Specification Notes.docx

PART 1 GENERAL

1.01 SUMMARY

A. Furnishing, assembly, installation, and placing into operation the lighting fixtures, lamps, lighting equipment components and accessories, and necessary equipment for the lighting controls as specified in the “Lighting Fixture Schedule”, “Lighting Control Riser Diagram”, with quantities and notes as shown on the “Lighting Plans”.

1.02 INTENT

A. These specifications are intended to establish a quality and performance standard only. In no way shall they take precedence over any local or national codes, nor shall they supersede any manufacturing or installation requirements established by the consulting Electrical Engineer, the National Electric Code, local electric codes, or by accepted standards of good practice.

1.03 SUBMITTALS

A. General - Submit (6) copies (either in printed or digital format) of the “Lighting Equipment Submittal” including lighting fixture catalog cuts and lighting control system cuts and shop drawings to the Architect, Engineer, and Lighting Consultant for approval prior to ordering or fabrication of equipment.

B. Equipment Data - The following data shall be included within the “Lighting Equipment Submittal” for each fixture type or system component:
   1. Corresponding fixture type or component description from Lighting Consultant’s plans and specifications shall be noted on each page.
   2. Manufacturer's descriptive literature and equipment specifications for each product including any lamps, accessories, transformers, ballasts, finish colors, control stations, etc.
   3. Manufacturer's equipment installation literature and training guide when requested.
   4. Manufacturer's drawings for all custom or modified lighting fixtures or equipment.
   5. Control system shop drawings shall include:
      a. Sizes of all equipment
      b. Number and types of wires required
      c. Type of connection required between various parts of the control system
      d. Manufacturer's equipment drawings, when requested.

C. Samples
   1. Submit samples and mockups as noted on Lighting Plans and Fixture Schedules.

1.04 QUALITY ASSURANCE

A. The Electrical Contractor shall provide all labor and materials and make all the necessary arrangements, except as specifically noted herein, so that when finished, a fully working system shall be turned over to the Owner. Any errors, omissions, or ambiguities are not to condition this requirement, but shall be brought to the attention of the Architect and/or Lighting Consultant.

1.05 DELIVERY, STORAGE, AND HANDLING

A. The Electrical Contractor shall be responsible for receiving, inventorying, and providing safe storage for all lighting equipment, whether supplied by the Electrical Contractor or by others.

B. All products shall be stored in manufacturer's unopened packaging until ready for installation.

1.06 WARRANTY

A. The Electrical Contractor shall warranty the installation and workmanship of the lighting system (excluding normal lamp replacement) for one-year starting from the date of written acceptance by Owner.

B. All lighting fixtures shall be covered by a one-year guarantee and all lighting control system equipment shall be covered by a two-year guarantee against defects in workmanship or material. Both guarantees shall start from the date of written acceptance by Owner.

C. If the lighting equipment is supplied by the installing Contractor, the guarantee shall include the labor to replace defective fixtures and an in-warranty service program providing for payment of authorized labor charges incurred in replacing inoperative fixtures.

D. All equipment to be warranted to perform the intended function within design limits.

1.07 OPERATIONAL MANUALS AND DRAWINGS

A. The Electrical Contractor and Lighting Supplier shall prepare an “Operational and Maintenance Manual” for the owner upon completion of the project.
   1. The Electrical Contractor shall furnish the Owner with (2) hard copies and (1) digital copy of this manual.
   2. The manual should include, but is not limited to, the following information:
      a. ”As Built” drawings, including transformer layout.
      b. Transformer Schedule including locations, sizes, loads, circuit number and installation date.
      c. Lamping Schedule.
      d. Final Fixture and Control Submittals.
      e. Panel Schedule including cross reference to Lighting Load Schedule.
      f. Operating Instructions or Manuals provided with all equipment including warranty information.
      g. Copy of final control system configuration approved by Owner.
      h. Copy of any shop drawings provided for the project, including custom fixtures, neon, etc.

1.08 MAINTENANCE CONTRACT

A. The Electrical Contractor shall provide the Owner with a maintenance agreement, separate from the fixture installation contract, if requested. This maintenance agreement shall include the following:
   1. Scope of work to be completed
   2. Cost to Owner including allowances for replacement lamps and parts.
   3. Interval of maintenance based on what is required to maintain the original integrity of the design.

PART 2 PRODUCTS

2.01 MANUFACTURERS

A. Refer to Lighting Fixture Schedule and Catalog Cuts and Lighting Control Riser Diagram for specified manufacturers.

B. Substitutions:
   1. Suppliers wishing to propose substitutes from the specified lighting equipment must receive approval from the Lighting Consultant before quoting fixtures.
   2. Suppliers offering substitutions must provide the following information:
      a. Substitute Product Manufacturer
      b. Complete Product Catalog Number
      c. Catalog Cut showing complete specifications including dimensions, photometrics, housing, and accessories (if applicable).
      d. Manufacturer and catalog number of any lighting accessories not furnished by fixture manufacturer (including color filters, spread lenses, etc.)
   3. Suppliers must include all accessories indicated on the Lighting Fixture Schedule with any substitute fixtures.
   4. Submit all substitutions to Focus Lighting.

2.02 GENERAL

A. All equipment supplied shall embody the maximum efficiency obtainable and the highest standards of workmanship and electrical and mechanical design.

B. All materials shall comply with national and local building and electrical codes. If any conflicts arise between the applicable codes and the lighting drawings or specifications, the supplier is responsible for bringing the discrepancy to the attention of the Lighting Consultant.

C. All equipment supplied shall be furnished with a UL listing (or locally approved equal certification).

D. Blemished, damaged, or unsatisfactory fixtures shall be replaced in a manner satisfactory to the Lighting Consultant without additional charge.

E. All fixtures shall be of a type and voltage which coordinates properly with the ceiling construction and electrical system into which they are to be installed. Any discrepancies shall be brought to the attention of the Architect/Consultant prior to the submission of shop drawings or cut sheets. Failure to do so shall exonerate the Architect/Consultant from any responsibility for problems resulting from same. Any work required to correct the discrepancy shall be performed by the Electrical Contractor at no additional cost.

F. All bids shall be quoted “F.O.B. Jobsite” with freight costs and insurance to the job site included.

2.03 EQUIPMENT TYPES

A. Lamps:
   1. All lamps shall be manufactured by General Electric, Osram/Sylvania, Philips, or Ushio.
   2. Provide 10% spare lamps for all fixtures (by fixture type). Refer to Lighting Cover Sheet for additional information regarding LED replacement lamps.
   3. All fluorescent lamps shall be by one manufacturer to ensure uniformity.
   4. All lamps shall be by one manufacturer per lamp type and wattage to ensure uniformity.

B. Recessed Fixtures:
   1. Fixture Supplier shall furnish all recessed light fixtures with hanger bars as required by ceiling type. Fixture Supplier shall coordinate and confirm ceiling type with General Contractor prior to ordering fixtures.

C. Pendant Mounted Fixtures:
   1. Fixture Supplier to provide pendant mounted fixtures with required mounting devices and accessories, including hickeys, stud-extensions, ball aligners, canopies, and stems.

D. Lighting Control Systems:
   1. Prior to bidding, the Control System Supplier shall be responsible to obtain the Lighting Plans, Lighting Fixture Schedule, Catalog Cuts, and Engineering Plans necessary to insure that the dimming system specified is compatible with the products being controlled.
      a. Examples include, but are not limited to: Emergency Lighting Loads and Transfer System, Cold Cathode, Neon, Low Voltage Transformers, Electronic Low Voltage Transformers, Fluorescent Ballasts, LED Power Supplies, HID lamps, etc.
   2. The Control System Supplier shall include the services of a Factory Engineer, who shall be available to report to the job site within fourteen (14) days of receipt of request from the Electrical Contractor, and shall remain at the job site until the system is fully operational to the satisfaction of the Owner's Representative, Architect, and Lighting Consultant.
   3. The Control System Supplier shall send (2) sets of all control and scene selector panels submittal drawings directly to the Architect and Lighting Consultant for coordination.
   4. The Factory Authorized Technician shall instruct Owner designated personnel as to the system operation.
   5. All control stations shall be provided with locking covers.

2.04 MATERIALS / COMPONENTS

A. Equipment parts and components shall be made of materials appropriate to their use and function, and as such, shall be resistant to corrosion and thermal and mechanical stresses encountered in the normal application and function of the fixtures.

PART 3 EXECUTION

3.01 INSTALLATION

A. Do not scale electrical or lighting drawings for exact location of lighting fixtures. In general, the architectural reflected ceiling plans indicate the proper locations of lighting fixtures.

B. Install in accordance with manufacturer's printed instructions, manufacturer's installation training and all applicable codes.

C. Installer Qualifications - Installer shall be trained and certified based on the acceptable manufacturers listed requirements.

D. Lighting fixtures are to be set level, plumb, and square with ceilings and walls.

E. All junction boxes, transformers, and wiring shall be installed in locations that are not visible to patrons. If access panels are required, confirm exact location, shape, and type with Design Architect.

F. Electrical Contractor to install all lamps and accessories as noted on Lighting Fixture Schedule in each fixture, regardless of who supplies the equipment. Refer to Lighting Plans for additional information.

G. Electrical Contractor to provide labor to adjust luminaires that require field adjustment or aiming. Refer to Lighting Plans for additional information.

H. In an effort to extend lamp life, and reduce socket and wiring degradation due to excessive heat, the Electrical Contractor and General Contractor shall be responsible and make every effort to provide adequate ventilation (normally accomplished with vent holes from the cove or pocket into the space above) to reduce heat build up to a minimum within light coves, back lit elements, enclosed or semi-enclosed lighting elements (refer to lighting details).

I. All wire utilized for connections to or between individual lamp sockets and lamp auxiliaries (i.e. wires which do not constitute “through circuit” wiring) shall be suitable for temperature, current, and voltage conditions to which it is subjected.

J. Recessed fixtures:
   1. Plaster frames for recessed fixtures shall be installed in a rigid manner so as not to allow fixture frame or housing to move or shift when trim is removed or fixture is relamped. If the plaster frame shifts when relamped or the trim is not tight to the ceiling, the Electrical Contractor shall re-secure frames and have the ceiling patched and refinished at their expense. If ceiling cutout is too large and creates light leak around trim, General Contractor shall replace that section of ceiling, patch and refinish at their expense. Spackle and/or caulk are not acceptable methods of patching or eliminating light leak as they may cause trim to stick to ceiling or ceiling finish may crack over time.
   2. Fixture trims must be removable for aiming and maintenance. If fixture trims have been specified to be painted to match ceiling, trims must not stick to ceiling after painting. If trims stick to ceiling, General Contractor shall remove trims, replacing any damaged trims and repair and refinish ceiling at their expense.
   3. If required by the Lighting Consultant and Design Architect, the General Contractor shall paint all trims and flanges to match surrounding ceiling. Care must be taken so that the trims do not stick to the ceiling after painting.
   4. Reflectors, reflector cones, and visible trims of all lighting fixtures shall not be installed until the completion of plastering, ceiling tile work, painting and general clean-up. They shall be carefully handled to avoid scratching and fingerprints and shall be, at the time of acceptance by Owner, completely clean.

K. Accessories:
   1. All lenses, louvers, or other light diffusing elements shall be removable, but positively held so that they are secured during relamping.

L. Pendant Mounted Fixtures:
   1. All hanging devices shall comply with code requirements. Hanging of Pendant Lights and/or Chandelier fixtures must meet or exceed local Electrical and Building Codes. Typically, these codes require that:
      a. Fixtures 5lbs. (2.2kg) and under may be hung from the screws of the electrical box;
      b. Fixtures 25lbs. (11.3kg) and under may be hung from the “chandelier stud” in the center of the electrical box;
      c. Fixtures over 25lbs. (11.3kg) must be hung independent of the electrical box.
   2. The General Contractor and Electrical Contractor shall be responsible for providing blocking as required to support fixture weight.
   3. Mounting stems shall be of the correct length to maintain the fixture heights shown on the drawings or established in the field.
   4. The allowable variation tolerance in mounting individual fixtures shall not exceed ¼” (6mm) and shall not vary more than ½” (12mm) from the floor mounting height shown on the drawings.
   5. Pendants and Rods: Where longer than 48 inches (1200 mm), brace to limit swinging.

6. Continuous Rows: Use tubing or stem for wiring at one point and tubing or rod for suspension for each unit length of fixture chassis, including one at each end. Fixtures must be absolutely level and in-line with each other.

M. Bracket mounted fixtures:
1. Bracket mounted fixtures shall be provided with a metal plate attached to outlet box, with threaded holes suitable for supporting the fixture rigidly in design position. Electrical boxes shall be securely mounted and not move in the wall or shall be reset and wall refinished at the Electrical Contractor's expense.

N. Track Lighting:
1. The Electrical Contractor shall allow for all track lighting to be wired with individual home runs (not looped) so invisible feeds (no junction box at end of track) may be utilized.

O. Transformers (applies to all transformers including (but not limited to) low voltage, neon, remote ballast, LED power supplies, exterior locations):
1. Electrical Contractor to locate all transformers (including low voltage, neon, remote ballasts, led power supplies, etc.) near fixtures in a well-ventilated and accessible location. Transformers must be installed (per local codes) in accessible areas large enough to dissipate the heat of the transformer. Temperatures should not exceed 100°F (38°C).
2. General Contractor shall provide removable access panel where required for access to transformers.
3. Transformers should be mounted as close to the load/feed lamp holders as practical to keep the secondary feeds as short as possible.
4. Electrical Contractor to determine wire size according to load and wire length to eliminate voltage drop. If voltage drop is a problem after installation, the Electrical Contractor is responsible for reinstallation (at no additional cost) of transformer and wire to solve problem.
5. Electrical Contractor to label front of transformer with load name and load location. For example: "Large Display Case @ Entry to Main Dining Room."
6. All Transformers connected to dimmed circuits (that do not have internal primary-side over current protection) shall be fused on the primary side at one and one half (1 1/2) amps over the highest current draw when dimmed as measured with an Amp Probe. This fuse may be of the in-line type and can be installed in the dimmer cabinet or the transformer enclosure, whichever is most accessible. The outside of the enclosure should be marked on the outside to show what fused circuits are inside and the size of the fuse. This fusing shall be the responsibility of the Installing Contractor.

P. Safety Cables:
1. C-Clamp mounted fixtures, portable fixtures mounted over patrons, etc. shall be installed with safety cables. Multiple safety cables may be required per fixture.

Q. LED Systems:
1. Wiring and components of all LED systems are shown for design intent only – not for installation. Due to possible changes in submittals and LED technology, wiring and control configurations may change from current drawings. Electrical Contractor to refer to supplied LED fixture manufacturer's wiring and installation instructions to confirm required wiring. Electrical Contractor to confirm dimmers to be used to control LEDs are compatible with supplied LEDs and LED drivers and/or dimmer modules.
2. Luminaires with LEDs shall provide power to the LEDs in accordance with the manufacturers' recommended specifications. LEDs shall not be overdriven beyond their manufacturer's specified nominal voltages and currents.

3. Luminaires shall be designed to maintain LED junction temperatures below the LED manufacturer's specified maximum temperature in ambient air temperatures up to 120°F (48°C).
4. All LED fixtures (100% of each lot) shall undergo a minimum eight-hour burn-in test during manufacturing.

R. Fluorescents:
1. Fixture and ballast combination shall be inaudible in a 20db room ambient.
2. Ballast shall comply with all applicable state and federal efficiency standards.
3. Ballasts shall not be affected by lamp failure and shall yield normal lamp life.
4. Ballasts that operate as a parallel circuit shall allow remaining lamp(s) to maintain full output if companion lamp(s) fail.

S. Dimming Fluorescents:
1. The Electrical Contractor shall connect and test the dimming fluorescent ballasts prior to opening to avoid delays. Refer to Lighting Plans for additional information.
2. The Electrical Contractor shall be responsible for confirming whether dimming fluorescent ballast is 2-wire or 3-wire. If the ballasts require 3-wire and only 2-wires are run, the Electrical Contractor shall be responsible for furnishing and installing the additional wire required and repairing damage to any architectural finishes (at no additional cost).
3. The Electrical Contractor shall "burn-in" all fluorescent lamps to be used in dimming fixtures for (100) hours at full before dimming fixtures in order to maintain lamp life.

T. Lighting Control Systems:
1. The Electrical Contractor shall not wire any lighting loads with shared neutrals. All circuits shall be two wire plus ground unless otherwise designated (i.e.: dimmed fluorescent may require 3 conductors.)
   a. Examples of this would include, but are not limited to, specific ballasts of fluorescent fixtures that are to be dimmed, compatibility of transformers for dimmed low-voltage lamps, and low-power factor transformers that are to be used to dim cathode lamps.
2. The Electrical Contractor, after testing and connecting all loads and testing and connecting all control wiring to the dimming equipment, shall await the arrival or approval of the Factory Authorized Technician before applying energy to the system.
3. The Control System Supplier to arrange for factory authorized warranty and non-warranty service through a local factory authorized Service Company.
4. Wall or Ceiling Mounted Control Devices:
   a. Examples of wall or ceiling mounted control devices include (but are not limited to) wall box dimmers, switches, control stations, and occupancy sensors.
   b. All switch boxes shall be securely mounted and leveled (+ - 1/32"or 1mm) prior to installation of switch or dimming device. There is very little room for adjustment of dimmers after box is installed.
   c. Do not use boxes with device mounting tabs that face out (such as Gangable Boxes) and do not use Shallow Boxes. Both of these box styles are too small to allow the needed space for connections and installation of the dimmers and may touch the sides of the circuit boards of some control stations.
   d. Some control stations will not fit in Standard Plaster (Extension) Rings. Electrical Contractor shall coordinate control stations with electrical boxes and their mounting accessories (i.e. Plaster Rings).
   e. In locations where dimmers are to be ganged, no breaking-off of fin sections will be allowed. This may require the installation of separate junction boxes with spacers and/or custom cover plates.
   f. If multigang switch or dimmer covers are to be used, Electrical Contractor shall take care to mount dimmers in proper order to accept standard covers.

g. Electrical Contractor to label all local dimmers with a descriptive name of the load they control. Example: "Bar top downlights"
h. Switched or dimmed receptacles shall have cover plates, supplied by Electrical Contractor, with engraved and filled legends marked "SWITCHED" or "DIMMED" above the appropriate receptacle. Split wired receptacles shall have one half marked "SWITCHED" and one half marked "UN-SWITCHED".

END OF SECTION

Focus Lighting Inc. New York City, NY.

Lighting Schedule for:

Manhattan West Resid. Amenities - Fixture Schedule

Issue Date: **9/9/2014**
Revised Date: **10/23/2014**
Print Date: ***24-Oct-14***

Item_Type	*Manufacturer, Catalog Number*	
Location / Use	*Long Description*	*Manufacturer Notes*
	Item_Notes	*Lamp Description / Notes*

LT** DECORATIVE # SELECTED BY DESIGN ARCHITECT

DECORATIVE FIXTURE TO BE DESIGNED OR SELECTED BY DESIGN ARCHITECT. SEE NOTES FOR ADDITIONAL INFORMATION.

()

KHDEC Code

Item Notes

DESIGN ARCHITECT'S FF&E SPECIFICATION INCLUDED FOR INFORMATION ABOUT LT-*** FIXTURES. DECORATIVE FIXTURES HAVE BEEN DESIGNED OR SELECTED BY DESIGN ARCHITECT. ALL QUANTITIES TO BE VERIFIED ON LATEST DRAWINGS.

LT-100 - ELEVATOR VESTIBULES AND LOBBY - DECORATIVE SCONCE - ALLOW 18 WATTS
LT-101 - ELEVATOR VESTIBULES - DECORATIVE PENDANT - ALLOW 60 WATTS
LT-102 - MAILROOM - DECORATIVE PENDANT - ALLOW 90 WATTS
LT-103 - LOBBY DESK - DECORATIVE PENDANT - ALLOW 35 WATTS
LT-104 - LOBBY SEATING - DECORATIVE PENDANT - ALLOW 140 WATTS
LT-105 - LOBBY SEATING - DECORATIVE PENDANT - ALLOW 18 WATTS
LT-106 - GYM RECEPTION - DECORATIVE PENDANT - ALLOW 72 WATTS
LT-107 - PLAYROOM - DECORATIVE PENDANT - ALLOW 18 WATTS
LT-108 - GYM CORRIDORS - DECORATIVE PENDANT - ALLOW 8 WATTS
LT-109 - GYM - DECORATIVE PENDANT - ALLOW 22 WATTS
LT-110 - GYM STUDIO - DECORATIVE PENDANT - ALLOW 56 WATTS
LT-111 - GYM CORRIDORS - DECORATIVE PENDANT - ALLOW 18 WATTS
LT-112 - LOCKER ROOMS & BATHROOMS - DECORATIVE SURFACE MOUNTED FIXTURE - ALLOW 18 WATTS
LT-113 - BATHROOMS - DECORATIVE SCONCE - ALLOW 18 WATTS
LT-114 - BASKETBALL COURT - DECORATIVE PENDANT - ALLOW 120 WATTS
LT-115 - THEATRE - DECORATIVE PENDANT - ALLOW 60 WATTS
LT-116 - GOLF LOUNGE - DECORATIVE PENDANT - ALLOW 36 WATTS
LT-117 - LIBRARY - DECORATIVE PENDANT - ALLOW 60 WATTS
LT-118 - LIBRARY - DECORATIVE PENDANT - ALLOW 78 WATTS
LT-119 - GAME ROOM - DECORATIVE PENDANT - ALLOW 36 WATTS
LT-120 - CRASH PAD CORRIDOR - DECORATIVE PENDANT - ALLOW 18 WATTS
LT-121 - LIBRARY - DECORATIVE SCONCE - ALLOW 18 WATTS
LT-123 - LIBRARY - DECORATIVE TABLE LAMP - ALLOW 36 WATTS
LT-125 - GYM STAIRWELL - DECORATIVE SCONCE - ALLOW 18 WATTS
LT-126 - TREATMENT ROOMS - DECORATIVE SCONCE - ALLOW 60 WATTS
LT-127 - BASKETBALL COURT - DECORATIVE SCONCE - ALLOW 18 WATTS
LT-129 - PAVILLION - DECORATIVE PENDANT - ALLOW 18 WATTS
LT-131 - LOUNGE - DECORATIVE PENDANT - ALLOW 18 WATTS
LT-132 - LOUNGE PDR - DECORATIVE PENDANT - ALLOW 18 WATTS
LT-133 - LOUNGE KITCHEN - DECORATIVE PENDANT - ALLOW 18 WATTS
LT-135 - LOBBY - DECORATIVE FLOOR LAMP - ALLOW 40 WATTS
LT-136 - LOBBY - DECORATIVE TABLE LAMP - ALLOW 40 WATTS
LT-137 - THEATRE - DECORATIVE TABLE LAMP - ALLOW 40 WATTS
LT-138 - LIBRARY - DECORATIVE TABLE LAMP - ALLOW 40 WATTS
LT-139 - LIBRARY - DECORATIVE FLOOR LAMP - ALLOW 40 WATTS
LT-140 - GOLF LOUNGE - DECORATIVE TABLE LAMP - ALLOW 40 WATTS
LT-141 - LOUNGE - DECORATIVE TABLE LAMP - ALLOW 40 WATTS
LT-142 - LOUNGE - DECORATIVE TABLE LAMP - ALLOW 40 WATTS
LT-143 - PAVILLION - DECORATIVE TABLE LAMP - ALLOW 40 WATTS
LT-144 - GAME ROOM - DECORATIVE TABLE LAMP - ALLOW 40 WATTS

Item_Type *Manufacturer, Catalog Number*
Location / Use *Long Description* *Manufacturer Notes*
Item_Notes *Lamp Description / Notes*

LT-145 - LOUNGE - DECORATIVE TABLE LAMP - ALLOW 40 WATTS

DUE TO CONSTANTLY CHANGING LED TECHNOLOGY, PRIOR TO PURCHASING LAMPS, THE LIGHTING SUPPLIER MUST FURNISH A SAMPLE OF THE CURRENT GENERATION OF THE SPECIFIED LAMP (OR PROPOSED ALTERNATE) WITH THE FIXTURE (AND DIMMER IF APPLICABLE) TO TEST COLOR TEMPERATURE, DIMMABILITY, AND DIFFUSION IN FIXTURES WITH SHADES. SAMPLE MUST BE APPROVED BY OWNER, DESIGN ARCHITECT, AND LIGHTING DESIGNER PRIOR TO RELEASING LAMP ORDER.

CAA

CRASH PAD

CONTRAST # T3450W-**-**/NW3000CM/SPL/ Read Item Notes Below!!

RECESSED ADJUSTABLE WALL WASH ACCENT, (1) 50W MR16 LAMP MAX., 4-7/16" DIAMETER TRIM WITH 2-5/8" APERTURE, HOUSING (NW3000CM): 13-1/2"L X 7-3/8"W X 3-11/16"D, 30° TILT, INTEGRAL MAGNETIC TRANSFORMER, SEE NOTES FOR OPTIONS.

OR APPROVED EQUAL - SUBMIT CUT FOR APPROVAL

(1) 12W MAXIMUM LED MR16
2700K SPOT LAMP

KHT3450W
Code

'/SPL' and Item Notes

LIGHTING SUPPLIER TO FURNISH FIXTURE WITH MATTE WHITE TRIM (-11), PAINTED BLACK REFLECTOR (-02), LOUVER, SPREAD LENS (SPREAD TBD), AND ROSCO DICHROIC COLOR FILTER (COLOR TBD).

LAMPING: (1) 12W MAXIMUM 2,700K LED MR16 REPLACEMENT LAMP - SPOT BEAM SPREAD - MINIMUM 400 LUMENS AND 5600 CBCP.

EXACT SPECIFICATION TO BE CONFIRMED AT TIME OF PURCHASE BASED ON CURRENT TECHNOLOGY AND MARKET AVAILABILITY.

LIGHTING SUPPLIER WILL NEED TO FURNISH SAMPLE OF FIXTURE WITH LAMP FOR REVIEW OF DIMMING AND COLOR TEMPERATURE BY OWNER, ARCHITECT, AND LIGHTING DESIGNER PRIOR TO FINALIZING SPECIFICATION.

CAW

SHOWERS

CONTRAST # S3450D-**/NW3000CM/SPL/ Read Item Notes Below!!

RECESSED SHOWER ADJUSTABLE ACCENT WITH FROSTED LENS, (1) 37W MR16 LAMP MAX., 4-7/16" DIAMETER TRIM WITH 2-5/8" APERTURE, HOUSING (NW3000CM): 13-1/2"L X 7-3/8"W X 3-11/16"D, 26° TILT, WET LOCATION, INTEGRAL TRANSFORMER. SEE NOTES FOR OPTIONS.

OR APPROVED EQUAL - SUBMIT CUT FOR APPROVAL

(1) 12W MAXIMUM LED MR16
2700K SPOT LAMP

KHS3450D
Code

'/SPL' and Item Notes

LIGHTING SUPPLIER TO FURNISH FIXTURE WITH MATTE WHITE TRIM (-11), CLEAR LENS (-C), MARINE GRADE TREATMENT (-MG), SPREAD LENS (SPREAD TBD), AND ROSCO DICHROIC COLOR FILTER (COLOR TBD).

LAMPING: (1) 12W MAXIMUM 2,700K LED MR16 REPLACEMENT LAMP - SPOT BEAM SPREAD - MINIMUM 400 LUMENS AND 5600 CBCP.

EXACT SPECIFICATION TO BE CONFIRMED AT TIME OF PURCHASE BASED ON CURRENT TECHNOLOGY AND MARKET AVAILABILITY.

LIGHTING SUPPLIER WILL NEED TO FURNISH SAMPLE OF FIXTURE WITH LAMP FOR REVIEW OF DIMMING AND COLOR TEMPERATURE BY OWNER, ARCHITECT, AND LIGHTING DESIGNER PRIOR TO FINALIZING SPECIFICATION.

Item_Type	*Manufacturer, Catalog Number*	
Location / Use	*Long Description*	*Manufacturer Notes*
	Item_Notes	*Lamp Description / Notes*

CBA

OFFICE

CONTRAST # T3450-**-**/NW3000CM/SPL/ Read Item Notes Below!!

RECESSED DOWNLIGHT WITH REFLECTOR, (1) 50W MR16 LAMP MAX., 4-7/16" DIAMETER TRIM WITH 2-5/8" APERTURE, HOUSING (NW3000CM): 13-1/2"L X 7-3/8"W X 3-11/16"D, INTEGRAL TRANSFORMER, SEE NOTES FOR OPTIONS.

OR APPROVED EQUAL - SUBMIT CUT FOR APPROVAL

(1) 12W MAXIMUM LED MR16

2700K SPOT LAMP

JZS CONTR T3450 Code *'/SPL' and Item Notes*

LIGHTING SUPPLIER TO FURNISH FIXTURE WITH MATTE WHITE TRIM (-11), PAINTED BLACK REFLECTOR (-02), LOUVER, SPREAD LENS (SPREAD TBD), AND ROSCO DICHROIC COLOR FILTER (COLOR TBD).

LAMPING: (1) 12W MAXIMUM 2,700K LED MR16 REPLACEMENT LAMP - SPOT BEAM SPREAD - MINIMUM 400 LUMENS AND 5600 CBCP.

EXACT SPECIFICATION TO BE CONFIRMED AT TIME OF PURCHASE BASED ON CURRENT TECHNOLOGY AND MARKET AVAILABILITY.

LIGHTING SUPPLIER WILL NEED TO FURNISH SAMPLE OF FIXTURE WITH LAMP FOR REVIEW OF DIMMING AND COLOR TEMPERATURE BY OWNER, ARCHITECT, AND LIGHTING DESIGNER PRIOR TO FINALIZING SPECIFICATION.

CBB

TREATMENT ROOMS

CONTRAST # T3450-**-**/NW3000CM/SPL/ Read Item Notes Below!!

RECESSED DOWNLIGHT WITH REFLECTOR, (1) 50W MR16 LAMP MAX., 4-7/16" DIAMETER TRIM WITH 2-5/8" APERTURE, HOUSING (NW3000CM): 13-1/2"L X 7-3/8"W X 3-11/16"D, INTEGRAL TRANSFORMER, SEE NOTES FOR OPTIONS.

OR APPROVED EQUAL - SUBMIT CUT FOR APPROVAL

(1) 12W MAXIMUM LED MR16

2700K SPOT LAMP

JZS CONTR T3450 Code *'/SPL' and Item Notes*

LIGHTING SUPPLIER TO FURNISH FIXTURE WITH MATTE WHITE TRIM (-11), PAINTED BLACK REFLECTOR (-02), LOUVER, SPREAD LENS (SPREAD TBD), AND ROSCO DICHROIC COLOR FILTER (COLOR TBD).

LAMPING: (1) 12W MAXIMUM 2,700K LED MR16 REPLACEMENT LAMP - SPOT BEAM SPREAD - MINIMUM 400 LUMENS AND 5600 CBCP.

EXACT SPECIFICATION TO BE CONFIRMED AT TIME OF PURCHASE BASED ON CURRENT TECHNOLOGY AND MARKET AVAILABILITY.

LIGHTING SUPPLIER WILL NEED TO FURNISH SAMPLE OF FIXTURE WITH LAMP FOR REVIEW OF DIMMING AND COLOR TEMPERATURE BY OWNER, ARCHITECT, AND LIGHTING DESIGNER PRIOR TO FINALIZING SPECIFICATION.

Item_Type	*Manufacturer, Catalog Number*	
Location / Use	*Long Description*	*Manufacturer Notes*
	Item_Notes	*Lamp Description / Notes*

CBC

CONTRAST # T3450-**-**/NW3000CM/SPL/ Read Item Notes Below!!

GAME ROOM

RECESSED DOWNLIGHT WITH REFLECTOR, (1) 50W MR16 LAMP MAX., 4-7/16" DIAMETER TRIM WITH 2-5/8" APERTURE, HOUSING (NW3000CM): 13-1/2"L X 7-3/8"W X 3-11/16"D, INTEGRAL TRANSFORMER, SEE NOTES FOR OPTIONS.

OR APPROVED EQUAL - SUBMIT CUT FOR APPROVAL

(1) 12W MAXIMUM LED MR16

2700K SPOT LAMP

JZS CONTR T3450
Code

'/SPL' and Item Notes

LIGHTING SUPPLIER TO FURNISH FIXTURE WITH MATTE WHITE TRIM (-11), PAINTED BLACK REFLECTOR (-02), LOUVER, SPREAD LENS (SPREAD TBD), AND ROSCO DICHROIC COLOR FILTER (COLOR TBD).

LAMPING: (1) 12W MAXIMUM 2,700K LED MR16 REPLACEMENT LAMP - SPOT BEAM SPREAD - MINIMUM 400 LUMENS AND 5600 CBCP.

EXACT SPECIFICATION TO BE CONFIRMED AT TIME OF PURCHASE BASED ON CURRENT TECHNOLOGY AND MARKET AVAILABILITY.

LIGHTING SUPPLIER WILL NEED TO FURNISH SAMPLE OF FIXTURE WITH LAMP FOR REVIEW OF DIMMING AND COLOR TEMPERATURE BY OWNER, ARCHITECT, AND LIGHTING DESIGNER PRIOR TO FINALIZING SPECIFICATION.

CGA

MP LIGHTING # L01-*-W***-*-*-**-**-*-*-**/SPL/ Read Item Notes Below!!

SCREEN

INTERIOR/EXTERIOR RECESSED INGROUND, WALL OR CEILING FIXTURE, 1W OR 2.5W LED, 2-1/4" DIAMETER FLANGE, 4-1/8" DIAMETER x 2-7/8" RECESSED DEPTH, ALUMINUM OR STAINLESS STEEL, TEMPERED GLASS LENS, INCLUDES SPLICE BOX WITH LEVEL, REQUIRES REMOTE DRIVER.

OR APPROVED EQUAL - SUBMIT CUT FOR APPROVAL

() LED

LED01-DKD
Code

'/SPL' and Item Notes

LIGHTING SUPPLIER TO FURNISH FIXTURE WITH 2.5W LED (-2), 2700K LEDS (-27S), SPOT BEAM (-S), CLEAR LENS (-C), BLACK ANODIZED HEXCELL LOUVER (-HB), NO ANGLE (-0), 12V AC INPUT (-A), STANDARD FLANGE (-S), NO BASE (-0), AND BRONZE FINISH (-BZ).

CGA-X

MP LIGHTING # TLW120MT050-01/SPL/ Read Item Notes Below!!

SCREEN

REMOTE 120V MAGNETIC TRANSFORMER, 6"L X 3"W X 1-3/8"H, 120V INPUT, 50W 12V OUTPUT, DRY LOCATION ONLY, 2LBS., SHORT CIRCUIT PROTECTION, OVERLOAD PROTECTION, ETL LISTED.

OR APPROVED EQUAL - SUBMIT CUT FOR APPROVAL

()

HM-TLW120MT050
Code

'/SPL' and Item Notes

LIGHTING SUPPLIER TO CONFIRM QUANTITY AND SIZE REQUIRED.

Item_Type	*Manufacturer, Catalog Number*	
Location / Use	*Long Description*	*Manufacturer Notes*
	Item_Notes	*Lamp Description / Notes*

CJA

LIBRARY

TIMES SQUARE # C4M-*-**/SPL/ Read Item Notes Below!!

SURFACE OR TRACK MOUNTED "FRESNEL" BODY ADJUSTABLE ACCENT, 75W PAR30 MAX., 6-1/4" DIAMETER X 6"L HEAD, 7-1/2" OVERALL HEIGHT INCLUDING YOKE, INTEGRAL LOCKING BARN DOORS 13-1/4" SQUARE X 3-5/16"D WHEN OPEN, EXTERNAL ACCESSORY HOLDER, SEE NOTES FOR OPTIONS.

OR APPROVED EQUAL - SUBMIT CUT FOR APPROVAL

(1) 14W LED PAR30 REPLACEMENT LAMP

2,700K LAMP

MC-TSQ-C4M
Code

'/SPL' and Item Notes

LIGHTING SUPPLIER TO FURNISH FIXTURE WITH BLACK FINISH (-B), CANOPY MOUNT (-CM4), COLOR FRAME (-CF17), LOUVER (-LV17), BARN DOORS, SPREAD LENS (SPREAD TBD), AND GLASS COLOR FILTER (COLOR TBD).

LAMPING: (1) 14W MAXIMUM 2,700K LED PAR30 REPLACEMENT LAMP - SPOT BEAM SPREAD - MINIMUM 1150 LUMENS AND 11700 CBCP.

EXACT SPECIFICATION TO BE CONFIRMED AT TIME OF PURCHASE BASED ON CURRENT TECHNOLOGY AND MARKET AVAILABILITY.

LIGHTING SUPPLIER WILL NEED TO FURNISH SAMPLE OF FIXTURE WITH LAMP FOR REVIEW OF DIMMING AND COLOR TEMPERATURE BY OWNER, ARCHITECT, AND LIGHTING DESIGNER PRIOR TO FINALIZING SPECIFICATION.

CLC

CRASH PAD SHELF

EDGE LIGHTING # SS3-24V-**-**/SPL/ Read Item Notes Below!!

SURFACE MOUNTED FLEXIBLE LED STRIP LIGHT, 2.4W/FT, 0.5" W X VARIOUS LENGTHS (MAX. 40 FT.), 75+ CRI, DIMMABLE, DRY LOCATION. REQUIRES 24VDC POWER SUPPLY.

OR APPROVED EQUAL - SUBMIT CUT FOR APPROVAL

() LED

SKSS324V
Code

'/SPL' and Item Notes

LIGHTING SUPPLIER TO FURNISH FIXTURE WITH VERY WARM WHITE LEDS (-VW) AND LENGTHS, ALUMINUM HEAT SINK TAPE, CONNECTORS, WHIPS, SPLICE BOXES, AND MOUNTING DEVICES AS REQUIRED BY APPLICATION.

CLC-X

CRASH PAD SHELF

JUSTIN # CLASS 2 DC REGULATED POWER SUPPLY/SPL/ Read Item Notes Below!!

CLASS-2 DC REGULATED DIMMABLE POWER SUPPLY, 120/240/277 VAC PRIMARY VOLTAGE, 12V OR 24V DC SECONDARY VOLTAGE, MANUAL RESET OVERLOAD PROTECTION, U.L. LISTED. SEE NOTES FOR OPTIONS.

OR APPROVED EQUAL - SUBMIT CUT FOR APPROVAL

()

BAJUSTIN
Code

'/SPL' and Item Notes

LIGHTING SUPPLIER TO CONFIRM QUANTITY AND SIZE REQUIRED.

CTA

STAGE

TIMES SQUARE # COMMERCIAL GRADE TRACK L0** SERIES/SPL/ Read Item Notes Below!!

ONE CIRCUIT LIGHTING TRACK, 1.42"W X 0.72"H X VARIOUS LENGTHS, FURNISH WITH END FEED, END CAP, CONNECTORS, & HARDWARE AS REQUIRED. SEE NOTES FOR OPTIONS.

OR APPROVED EQUAL - SUBMIT CUT FOR APPROVAL

()

ssCOMTRACK
Code

'/SPL' and Item Notes

LIGHTING SUPPLIER TO FURNISH FIXTURE WITH BLACK FINISH (-B), END CAPS, CONNECTORS, FEEDS, AND LENGTHS AS REQUIRED.

Item_Type | *Manufacturer, Catalog Number*
Location / Use | *Long Description* | *Manufacturer Notes*
Item_Notes | *Lamp Description / Notes*

CTB — TIMES SQUARE # C4M-*-**/SPL/ Read Item Notes Below!!

STAGE

SURFACE OR TRACK MOUNTED "FRESNEL" BODY ADJUSTABLE ACCENT, 75W PAR30 MAX., 6-1/4" DIAMETER X 6"L HEAD, 7-1/2" OVERALL HEIGHT INCLUDING YOKE, INTEGRAL LOCKING BARN DOORS 13-1/4" SQUARE X 3-5/16"D WHEN OPEN, EXTERNAL ACCESSORY HOLDER, SEE NOTES FOR OPTIONS.

OR APPROVED EQUAL - SUBMIT CUT FOR APPROVAL

(1) 14W LED PAR30 REPLACEMENT LAMP

2,700K LAMP

MC-TSQ-C4M
Code

'/SPL' and Item Notes

LIGHTING SUPPLIER TO FURNISH FIXTURE WITH BLACK FINISH (-B), SAFETY CABLE (-SC-24), T1 TRACK ADAPTER (-T1), COLOR FRAME (-CF17), LOUVER (-LV17), BARN DOORS, SPREAD LENS (SPREAD TBD), AND GLASS COLOR FILTER (COLOR TBD).

LAMPING: (1) 14W MAXIMUM 2,700K LED PAR30 REPLACEMENT LAMP - SPOT BEAM SPREAD - MINIMUM 1150 LUMENS AND 11700 CBCP.

EXACT SPECIFICATION TO BE CONFIRMED AT TIME OF PURCHASE BASED ON CURRENT TECHNOLOGY AND MARKET AVAILABILITY.

LIGHTING SUPPLIER WILL NEED TO FURNISH SAMPLE OF FIXTURE WITH LAMP FOR REVIEW OF DIMMING AND COLOR TEMPERATURE BY OWNER, ARCHITECT, AND LIGHTING DESIGNER PRIOR TO FINALIZING SPECIFICATION.

CUA — COLOR KINETICS # eW PROFILE POWERCORE-***/SPL/ Read Item Notes Below!!

TREATMENT ROOMS

SURFACE MOUNTED LINEAR LINE VOLTAGE WHITE LED TASK LIGHT, 1.7"W X 0.88"H X VARIOUS LENGTHS, 105° X 100° SPREAD, "POWERCORE", 3000K OR 4000K LEDS, INTEGRAL CONNECTOR, 50FT. MAX. RUN LENGTH, ELV DIMMING.

OR APPROVED EQUAL - SUBMIT CUT FOR APPROVAL

() LED

BA-EWPROFILE
Code

'/SPL' and Item Notes

LIGHTING SUPPLIER TO FURNISH FIXTURE WITH 3000K LEDS, LENGTHS AS REQUIRED, AND LEADER CABLES, JUMPER CABLES, WIRING COMPARTMENTS, AND MOUNTING TRACK AS REQUIRED.

GAA — CONTRAST # T3450W-**-**/NW3000CM/SPL/ Read Item Notes Below!!

GYM

RECESSED ADJUSTABLE WALL WASH ACCENT, (1) 50W MR16 LAMP MAX., 4-7/16" DIAMETER TRIM WITH 2-5/8" APERTURE, HOUSING (NW3000CM): 13-1/2"L X 7-3/8"W X 3-11/16"D, 30° TILT, INTEGRAL MAGNETIC TRANSFORMER, SEE NOTES FOR OPTIONS.

OR APPROVED EQUAL - SUBMIT CUT FOR APPROVAL

(1) 12W MAXIMUM LED MR16

12W MAXIMUM LED MR16

KHT3450W
Code

'/SPL' and Item Notes

LIGHTING SUPPLIER TO FURNISH FIXTURE WITH MATTE WHITE TRIM (-11), PAINTED BLACK REFLECTOR (-02), LOUVER, SPREAD LENS (SPREAD TBD), AND ROSCO DICHROIC COLOR FILTER (COLOR TBD).

LAMPING: (1) 12W MAXIMUM 2,700K LED MR16 REPLACEMENT LAMP - SPOT BEAM SPREAD - MINIMUM 400 LUMENS AND 5600 CBCP.

EXACT SPECIFICATION TO BE CONFIRMED AT TIME OF PURCHASE BASED ON CURRENT TECHNOLOGY AND MARKET AVAILABILITY.

LIGHTING SUPPLIER WILL NEED TO FURNISH SAMPLE OF FIXTURE WITH LAMP FOR REVIEW OF DIMMING AND COLOR TEMPERATURE BY OWNER, ARCHITECT, AND LIGHTING DESIGNER PRIOR TO FINALIZING SPECIFICATION.

Item_Type	*Manufacturer, Catalog Number*	
Location / Use	*Long Description*	*Manufacturer Notes*
	Item_Notes	*Lamp Description / Notes*

GAW — CONTRAST # S3450D-**/NW3000CM/SPL/ Read Item Notes Below!!

POOL

RECESSED SHOWER ADJUSTABLE ACCENT WITH FROSTED LENS, (1) 37W MR16 LAMP MAX., 4-7/16" DIAMETER TRIM WITH 2-5/8" APERTURE, HOUSING (NW3000CM): 13-1/2"L X 7-3/8"W X 3-11/16"D, 26° TILT, WET LOCATION, INTEGRAL TRANSFORMER. SEE NOTES FOR OPTIONS.

OR APPROVED EQUAL - SUBMIT CUT FOR APPROVAL

(1) 12W MAXIMUM LED MR16

2700K SPOT LAMP

KHS3450D
Code

'/SPL' and Item Notes

LIGHTING SUPPLIER TO FURNISH FIXTURE WITH MATTE WHITE TRIM (-11), CLEAR LENS (-C), MARINE GRADE TREATMENT (-MG), SPREAD LENS (SPREAD TBD), AND ROSCO DICHROIC COLOR FILTER (COLOR TBD).

LAMPING: (1) 12W MAXIMUM 2,700K LED MR16 REPLACEMENT LAMP - SPOT BEAM SPREAD - MINIMUM 400 LUMENS AND 5600 CBCP.

EXACT SPECIFICATION TO BE CONFIRMED AT TIME OF PURCHASE BASED ON CURRENT TECHNOLOGY AND MARKET AVAILABILITY.

LIGHTING SUPPLIER WILL NEED TO FURNISH SAMPLE OF FIXTURE WITH LAMP FOR REVIEW OF DIMMING AND COLOR TEMPERATURE BY OWNER, ARCHITECT, AND LIGHTING DESIGNER PRIOR TO FINALIZING SPECIFICATION.

GBA — CONTRAST # T3450-**-**/NW3000CM/SPL/ Read Item Notes Below!!

OFFICE

RECESSED DOWNLIGHT WITH REFLECTOR, (1) 50W MR16 LAMP MAX., 4-7/16" DIAMETER TRIM WITH 2-5/8" APERTURE, HOUSING (NW3000CM): 13-1/2"L X 7-3/8"W X 3-11/16"D, INTEGRAL TRANSFORMER, SEE NOTES FOR OPTIONS.

OR APPROVED EQUAL - SUBMIT CUT FOR APPROVAL

(1) 12W MAXIMUM LED MR16

2700K SPOT LAMP

JZS CONTR T3450
Code

'/SPL' and Item Notes

LIGHTING SUPPLIER TO FURNISH FIXTURE WITH MATTE WHITE TRIM (-11), PAINTED BLACK REFLECTOR (-02), LOUVER, SPREAD LENS (SPREAD TBD), AND ROSCO DICHROIC COLOR FILTER (COLOR TBD).

LAMPING: (1) 12W MAXIMUM 2,700K LED MR16 REPLACEMENT LAMP - SPOT BEAM SPREAD - MINIMUM 400 LUMENS AND 5600 CBCP.

EXACT SPECIFICATION TO BE CONFIRMED AT TIME OF PURCHASE BASED ON CURRENT TECHNOLOGY AND MARKET AVAILABILITY.

LIGHTING SUPPLIER WILL NEED TO FURNISH SAMPLE OF FIXTURE WITH LAMP FOR REVIEW OF DIMMING AND COLOR TEMPERATURE BY OWNER, ARCHITECT, AND LIGHTING DESIGNER PRIOR TO FINALIZING SPECIFICATION.

Item_Type	*Manufacturer, Catalog Number*	
Location / Use	*Long Description*	*Manufacturer Notes*
	Item_Notes	*Lamp Description / Notes*

GBW

CONTRAST # S3450-**/NW3000CM/SPL/ Read Item Notes Below!!

SHOWERS

RECESSED SHOWER DOWNLIGHT WITH FROSTED LENS, (1) 37W MR16 LAMP MAX., 4-7/16" DIAMETER TRIM WITH 2-5/8" APERTURE, HOUSING (NW3000CM): 13-1/2"L X 7-3/8"W X 3-11/16"D, WET LOCATION, INTEGRAL TRANSFORMER, SEE NOTES FOR OPTIONS.

OR APPROVED EQUAL - SUBMIT CUT FOR APPROVAL

(1) 12W MAXIMUM LED MR16

2700K SPOT LAMP

JK S3450
Code

'/SPL' and Item Notes

LIGHTING SUPPLIER TO FURNISH FIXTURE WITH MATTE WHITE TRIM (-11), PAINTED WHITE REFLECTOR (-01), CLEAR LENS (-C), MARINE GRADE TREATMENT (-MG), SPREAD LENS (SPREAD TBD), AND ROSCO DICHROIC COLOR FILTER (COLOR TBD).

LAMPING: (1) 12W MAXIMUM 2,700K LED MR16 REPLACEMENT LAMP - SPOT BEAM SPREAD - MINIMUM 400 LUMENS AND 5600 CBCP.

EXACT SPECIFICATION TO BE CONFIRMED AT TIME OF PURCHASE BASED ON CURRENT TECHNOLOGY AND MARKET AVAILABILITY.

LIGHTING SUPPLIER WILL NEED TO FURNISH SAMPLE OF FIXTURE WITH LAMP FOR REVIEW OF DIMMING AND COLOR TEMPERATURE BY OWNER, ARCHITECT, AND LIGHTING DESIGNER PRIOR TO FINALIZING SPECIFICATION.

GBY

CONTRAST # S3450-**/NW3000CM/SPL/ Read Item Notes Below!!

POOL

RECESSED SHOWER DOWNLIGHT WITH FROSTED LENS, (1) 37W MR16 LAMP MAX., 4-7/16" DIAMETER TRIM WITH 2-5/8" APERTURE, HOUSING (NW3000CM): 13-1/2"L X 7-3/8"W X 3-11/16"D, WET LOCATION, INTEGRAL TRANSFORMER, SEE NOTES FOR OPTIONS.

OR APPROVED EQUAL - SUBMIT CUT FOR APPROVAL

(1) 12W MAXIMUM LED MR16

2700K SPOT LAMP

JK S3450
Code

'/SPL' and Item Notes

LIGHTING SUPPLIER TO FURNISH FIXTURE WITH MATTE WHITE TRIM (-11), PAINTED WHITE REFLECTOR (-01), CLEAR LENS (-C), MARINE GRADE TREATMENT (-MG), SPREAD LENS (SPREAD TBD), AND ROSCO DICHROIC COLOR FILTER (COLOR TBD).

LAMPING: (1) 12W MAXIMUM 2,700K LED MR16 REPLACEMENT LAMP - SPOT BEAM SPREAD - MINIMUM 400 LUMENS AND 5600 CBCP.

EXACT SPECIFICATION TO BE CONFIRMED AT TIME OF PURCHASE BASED ON CURRENT TECHNOLOGY AND MARKET AVAILABILITY.

LIGHTING SUPPLIER WILL NEED TO FURNISH SAMPLE OF FIXTURE WITH LAMP FOR REVIEW OF DIMMING AND COLOR TEMPERATURE BY OWNER, ARCHITECT, AND LIGHTING DESIGNER PRIOR TO FINALIZING SPECIFICATION.

GCD

FOCAL POINT # FSDL-44-FLXP-LL*-**K-1C-***-***-U/SPL/ Read Item Notes Below!!

CLIMBING WALL

RECESSED CIRCULAR LENSED LED DOWNLIGHT, INTEGRAL LEDS, 48" DIAMETER X 8.65" RECESS DEPTH, FROSTED ACRYLIC LENS, 140.3 SYSTEM WATTS FOR STANDARD OUTPUT, 175.4 SYSTEM WATTS FOR MEDIUM OUTPUT, INTEGRAL DIMMING DRIVER, UL DRY OR DAMP. SEE NOTES FOR OPTIONS.

OR APPROVED EQUAL - SUBMIT CUT FOR APPROVAL

() LED

KHFSDL44

Code

'/SPL' and Item Notes

LIGHTING SUPPLIER TO FURNISH FIXTURE WITH MEDIUM OUTPUT LEDS (-LL2), 3000K COLOR TEMPERATURE (-30K), AND 0-10V DIMMING (-LD1).

Item_Type	*Manufacturer, Catalog Number*	
Location / Use	*Long Description*	*Manufacturer Notes*
	Item_Notes	*Lamp Description / Notes*

GJA

STONCO # VK-2-K/SPL/ Read Item Notes Below!!

SAUNA

CEILING MOUNTED ROUGHLYTE VAPORTIGHT SURFACE ADAPTER WITH GLASS GLOBE, 200W MEDIUM SCREW BASE LAMP MAX., 5-1/8" DIAMETER X 8-3/4"H OVERALL DIMENSIONS INCLUDING GLOBE, DIE CAST ALUMINUM, LAMP DOWN MOUNTING ONLY.

OR APPROVED EQUAL - SUBMIT CUT FOR APPROVAL

(1) 18W LED A19 REPLACEMENT LAMP

2,700K LAMP

JA-VK2K
Code

'/SPL' and Item Notes

LAMPING: (1) 18W MAXIMUM 2,700K LED A19 REPLACEMENT LAMP - MINIMUM 1100 LUMENS.

EXACT SPECIFICATION TO BE CONFIRMED AT TIME OF PURCHASE BASED ON CURRENT TECHNOLOGY AND MARKET AVAILABILITY.

LIGHTING SUPPLIER WILL NEED TO FURNISH SAMPLE OF FIXTURE WITH LAMP FOR REVIEW OF DIMMING AND COLOR TEMPERATURE BY OWNER, ARCHITECT, AND LIGHTING DESIGNER PRIOR TO FINALIZING SPECIFICATION.

GLB

COLOR KINETICS # eW FUSE POWERCORE/SPL/ Read Item Notes Below!!

SWIMMING POOL

SURFACE MOUNTED LINEAR LINE VOLTAGE WHITE LED GRAZE FIXTURE, 12.5W MAXIMUM, 1.5"W X 2.1"H X 12"L, VARIOUS BEAM SPREADS, 2700K, 3000K, 3500K, OR 4000K, DIMMABLE FROM STANDARD ELV WALL BOX, INTEGRAL CONNECTOR.

OR APPROVED EQUAL - SUBMIT CUT FOR APPROVAL

() LED

KHFUSE
Code

'/SPL' and Item Notes

LIGHTING SUPPLIER TO FURNISH FIXTURE WITH 2700K COLOR TEMPERATURE, 30° X 60° BEAM ANGLE, AND LEADER CABLE, JUMPER CABLES, AND MOUNTING TRACK AS REQUIRED PER LOCATION. LIGHTING SUPPLIER TO FURNISH ROSCO GEL SLEEVE WITH PRE-CUT SLIT (COLOR TBD) TO CONTINUOUSLY COVER FIXTURE RUN LENGTH.

GTA

TIMES SQUARE # COMMERCIAL GRADE TRACK L0** SERIES/SPL/ Read Item Notes Below!!

GYM

ONE CIRCUIT LIGHTING TRACK, 1.42"W X 0.72"H X VARIOUS LENGTHS, FURNISH WITH END FEED, END CAP, CONNECTORS, & HARDWARE AS REQUIRED. SEE NOTES FOR OPTIONS.

OR APPROVED EQUAL - SUBMIT CUT FOR APPROVAL

()

ssCOMTRACK
Code

'/SPL' and Item Notes

LIGHTING SUPPLIER TO FURNISH FIXTURE WITH BLACK FINISH (-B), END CAPS, CONNECTORS, FEEDS, AND LENGTHS AS REQUIRED.

Item_Type	*Manufacturer, Catalog Number*	
Location / Use	*Long Description*	*Manufacturer Notes*
	Item_Notes	*Lamp Description / Notes*

GTB — TIMES SQUARE # C4M-*-**/SPL/ Read Item Notes Below!!

GYM

SURFACE OR TRACK MOUNTED "FRESNEL" BODY ADJUSTABLE ACCENT, 75W PAR30 MAX., 6-1/4" DIAMETER X 6"L HEAD, 7-1/2" OVERALL HEIGHT INCLUDING YOKE, INTEGRAL LOCKING BARN DOORS 13-1/4" SQUARE X 3-5/16"D WHEN OPEN, EXTERNAL ACCESSORY HOLDER, SEE NOTES FOR OPTIONS.

OR APPROVED EQUAL - SUBMIT CUT FOR APPROVAL

(1) 14W LED PAR30 REPLACEMENT LAMP

2,700K LAMP

MC-TSQ-C4M
Code

'/SPL' and Item Notes

LIGHTING SUPPLIER TO FURNISH FIXTURE WITH BLACK FINISH (-B), SAFETY CABLE (-SC-24), T1 TRACK ADAPTER (-T1), COLOR FRAME (-CF17), LOUVER (-LV17), BARN DOORS, SPREAD LENS (SPREAD TBD), AND GLASS COLOR FILTER (COLOR TBD).

LAMPING: (1) 14W MAXIMUM 2,700K LED PAR30 REPLACEMENT LAMP - SPOT BEAM SPREAD - MINIMUM 1150 LUMENS AND 11700 CBCP.

EXACT SPECIFICATION TO BE CONFIRMED AT TIME OF PURCHASE BASED ON CURRENT TECHNOLOGY AND MARKET AVAILABILITY.

LIGHTING SUPPLIER WILL NEED TO FURNISH SAMPLE OF FIXTURE WITH LAMP FOR REVIEW OF DIMMING AND COLOR TEMPERATURE BY OWNER, ARCHITECT, AND LIGHTING DESIGNER PRIOR TO FINALIZING SPECIFICATION.

LAA — CONTRAST # T3450W-**-**/NW3000CM/SPL/ Read Item Notes Below!!

LOBBY

RECESSED ADJUSTABLE WALL WASH ACCENT, (1) 50W MR16 LAMP MAX., 4-7/16" DIAMETER TRIM WITH 2-5/8" APERTURE, HOUSING (NW3000CM): 13-1/2"L X 7-3/8"W X 3-11/16"D, 30° TILT, INTEGRAL MAGNETIC TRANSFORMER, SEE NOTES FOR OPTIONS.

OR APPROVED EQUAL - SUBMIT CUT FOR APPROVAL

(1) 12W MAXIMUM LED MR16

2700K SPOT LAMP

KHT3450W
Code

'/SPL' and Item Notes

LIGHTING SUPPLIER TO FURNISH FIXTURE WITH MATTE WHITE TRIM (-11), PAINTED BLACK REFLECTOR (-02), LOUVER, SPREAD LENS (SPREAD TBD), AND ROSCO DICHROIC COLOR FILTER (COLOR TBD).

LAMPING: (1) 12W MAXIMUM 2,700K LED MR16 REPLACEMENT LAMP - SPOT BEAM SPREAD - MINIMUM 400 LUMENS AND 5600 CBCP.

EXACT SPECIFICATION TO BE CONFIRMED AT TIME OF PURCHASE BASED ON CURRENT TECHNOLOGY AND MARKET AVAILABILITY.

LIGHTING SUPPLIER WILL NEED TO FURNISH SAMPLE OF FIXTURE WITH LAMP FOR REVIEW OF DIMMING AND COLOR TEMPERATURE BY OWNER, ARCHITECT, AND LIGHTING DESIGNER PRIOR TO FINALIZING SPECIFICATION.

Item_Type	*Manufacturer, Catalog Number*	
Location / Use	*Long Description*	*Manufacturer Notes*
	Item_Notes	*Lamp Description / Notes*

LBA

MAILROOM

CONTRAST # T3450-**-**/NW3000CM/SPL/ Read Item Notes Below!!

RECESSED DOWNLIGHT WITH REFLECTOR, (1) 50W MR16 LAMP MAX., 4-7/16" DIAMETER TRIM WITH 2-5/8" APERTURE, HOUSING (NW3000CM): 13-1/2"L X 7-3/8"W X 3-11/16"D, INTEGRAL TRANSFORMER, SEE NOTES FOR OPTIONS.

OR APPROVED EQUAL - SUBMIT CUT FOR APPROVAL

(1) 12W MAXIMUM LED MR16

2700K SPOT LAMP

JZS CONTR T3450
Code

'/SPL' and Item Notes

LIGHTING SUPPLIER TO FURNISH FIXTURE WITH MATTE WHITE TRIM (-11), PAINTED BLACK REFLECTOR (-02), LOUVER, SPREAD LENS (SPREAD TBD), AND ROSCO DICHROIC COLOR FILTER (COLOR TBD).

LAMPING: (1) 12W MAXIMUM 2,700K LED MR16 REPLACEMENT LAMP - SPOT BEAM SPREAD - MINIMUM 400 LUMENS AND 5600 CBCP.

EXACT SPECIFICATION TO BE CONFIRMED AT TIME OF PURCHASE BASED ON CURRENT TECHNOLOGY AND MARKET AVAILABILITY.

LIGHTING SUPPLIER WILL NEED TO FURNISH SAMPLE OF FIXTURE WITH LAMP FOR REVIEW OF DIMMING AND COLOR TEMPERATURE BY OWNER, ARCHITECT, AND LIGHTING DESIGNER PRIOR TO FINALIZING SPECIFICATION.

LLA

LOBBY DESK

TOKISTAR # AV-*-L**/AV-CH-**/AV-CV-**/SPL/ Read Item Notes Below!!

LINEAR LOW VOLTAGE LIGHT STRIP IN CHANNEL, 0.72W LED RIGID LOOP REPLACEMENT LAMPS (SEE NOTES FOR CENTERS), 1-1/2"W X 1-1/4"H, CLEAR OR FROSTED PVC LENS, REQUIRES REMOTE 24V TRANSFORMER.

OR APPROVED EQUAL - SUBMIT CUT FOR APPROVAL

(4) 0.72W 2400K LEDS

KHAVCL
Code

'/SPL' and Item Notes

LIGHTING SUPPLIER TO FURNISH FIXTURE WITH 3" O.C. SOCKET SPACING (-3), 2400K LEDS (-LWW), WHITE FINISH (-WH), CLEAR LENS (-CL), MINI JUNCTION BOX CONNECTORS (-AV-JBOX), AND END CAPS (-AV-EC-WH) AS REQUIRED.

LLA-X

LOBBY DESK

TOKISTAR # T24-*/SPL/ Read Item Notes Below!!

ENCAPSULATED TRANSFORMER, 100VA - 1200VA, 120VAC PRIMARY, 24V SECONDARY, MANUAL RESET THERMAL 25A CIRCUIT BREAKER PROTECTED SECONDARIES, ETL LISTED TO UL STANDARD 2108.

OR APPROVED EQUAL - SUBMIT CUT FOR APPROVAL

()

KDTOKISTARXL
Code

'/SPL' and Item Notes

LIGHTING SUPPLIER TO CONFIRM QUANTITY AND SIZE REQUIRED.

LLB

LOBBY SIDE WALLS

COLOR KINETICS # eW FUSE POWERCORE/SPL/ Read Item Notes Below!!

SURFACE MOUNTED LINEAR LINE VOLTAGE WHITE LED GRAZE FIXTURE, 12.5W MAXIMUM, 1.5"W X 2.1"H X 12"L, VARIOUS BEAM SPREADS, 2700K, 3000K, 3500K, OR 4000K, DIMMABLE FROM STANDARD ELV WALL BOX, INTEGRAL CONNECTOR.

OR APPROVED EQUAL - SUBMIT CUT FOR APPROVAL

() LED

KHFUSE
Code

'/SPL' and Item Notes

LIGHTING SUPPLIER TO FURNISH FIXTURE WITH 2700K COLOR TEMPERATURE, 30° X 60° BEAM ANGLE, AND LEADER CABLE, JUMPER CABLES, AND MOUNTING TRACK AS REQUIRED PER LOCATION. LIGHTING SUPPLIER TO FURNISH ROSCO GEL SLEEVE WITH PRE-CUT SLIT (COLOR TBD) TO CONTINUOUSLY COVER FIXTURE RUN LENGTH.

Item_Type	*Manufacturer, Catalog Number*	
Location / Use	*Long Description*	*Manufacturer Notes*
	Item_Notes	*Lamp Description / Notes*

LTA

TECH LIGHTING # MONORAIL 700MOA-**-*/SPL/ Read Item Notes Below!!

LOBBY

DECORATIVE SUSPENDED 1- CIRCUIT LOW VOLTAGE TRACK, 0.3"W X 0.6"H, FIELD CUTTABLE & BENDABLE, FURNISH WITH ALL HARDWARE, CONNECTORS, STANDOFFS, ETC. TO CREATE A COMPLETE WORKING SYSTEM, REQUIRES REMOTE LOW VOLTAGE TRANSFORMER.

OR APPROVED EQUAL - SUBMIT CUT FOR APPROVAL

()

JWMON-RAIL

Code

'/SPL' and Item Notes

LIGHTING SUPPLIER TO FURNISH FIXTURE WITH BROWN INSULATOR (-BR), ANTIQUE BRONZE FINISH (-Z), AND END CAPS, CONNECTORS, STANDOFFS, FEEDS, AND LENGTHS AS REQUIRED BY LAYOUT.

LTA-X

TECH LIGHTING # 700AT-***-T/SPL/ Read Item Notes Below!!

LOBBY

LOW VOLTAGE REMOTE 120V PRIMARY, 12V SECONDARY HARD WIRE MAGNETIC TRANSFORMER. WATTAGE AS REQUIRED. SUPPLY WITH POWER FEED OPTION APPROPRIATE FOR APPLICATION. QUANTITY, SIZE, AND LOCATION PER LOAD.

OR APPROVED EQUAL - SUBMIT CUT FOR APPROVAL

()

KH700AT

Code

'/SPL' and Item Notes

LIGHTING SUPPLIER TO CONFIRM QUANTITY AND SIZE REQUIRED.

LTB

TECH LIGHTING # "TELLIUM" 700-**-TLM-**-*/SPL/ Read Item Notes Below!!

LOBBY

TRACK MOUNTED ADJUSTABLE ACCENT, 50W MR16 LAMP MAX., 2.3" DIAMETER X 3.8"H HEAD, 90° TILT, 360° ROTATION, INTEGRATED LENS HOLDER FOR 2 ACCESSORIES, COMPATIBLE WITH FREEJACK, MONORAIL, 2-CIRCUIT MONORAIL. SEE NOTES FOR OPTIONS AND ACCESSORIES.

OR APPROVED EQUAL - SUBMIT CUT FOR APPROVAL

(1) 12W MAXIMUM LED MR16

2700K SPOT LAMP

KHTELLIUM

Code

'/SPL' and Item Notes

LIGHTING SUPPLIER TO FURNISH FIXTURE WITH MONORAIL MOUNTING (-MO), 3" STEM (-03), ANTIQUE BRONZE FINISH (-Z), LOUVER, SPREAD LENS (SPREAD TBD), AND ROSCO DICHROIC COLOR FILTER (COLOR TBD).

LAMPING: (1) 12W MAXIMUM 2,700K LED MR16 REPLACEMENT LAMP - SPOT BEAM SPREAD - MINIMUM 400 LUMENS AND 5600 CBCP.

EXACT SPECIFICATION TO BE CONFIRMED AT TIME OF PURCHASE BASED ON CURRENT TECHNOLOGY AND MARKET AVAILABILITY.

LIGHTING SUPPLIER WILL NEED TO FURNISH SAMPLE OF FIXTURE WITH LAMP FOR REVIEW OF DIMMING AND COLOR TEMPERATURE BY OWNER, ARCHITECT, AND LIGHTING DESIGNER PRIOR TO FINALIZING SPECIFICATION.

Item_Type	*Manufacturer, Catalog Number*	
Location / Use	*Long Description*	*Manufacturer Notes*
	Item_Notes	*Lamp Description / Notes*

RAA — CONTRAST # T3450W-**-**/NW3000CM/SPL/ Read Item Notes Below!!

LOUNGE

RECESSED ADJUSTABLE WALL WASH ACCENT, (1) 50W MR16 LAMP MAX., 4-7/16" DIAMETER TRIM WITH 2-5/8" APERTURE, HOUSING (NW3000CM): 13-1/2"L X 7-3/8"W X 3-11/16"D, 30° TILT, INTEGRAL MAGNETIC TRANSFORMER, SEE NOTES FOR OPTIONS.

OR APPROVED EQUAL - SUBMIT CUT FOR APPROVAL

(1) 12W MAXIMUM LED MR16
2700K SPOT LAMP

KHT3450W
Code

'/SPL' and Item Notes

LIGHTING SUPPLIER TO FURNISH FIXTURE WITH MATTE WHITE TRIM (-11), PAINTED BLACK REFLECTOR (-02), LOUVER, SPREAD LENS (SPREAD TBD), AND ROSCO DICHROIC COLOR FILTER (COLOR TBD).

LAMPING: (1) 12W MAXIMUM 2,700K LED MR16 REPLACEMENT LAMP - SPOT BEAM SPREAD - MINIMUM 400 LUMENS AND 5600 CBCP.

EXACT SPECIFICATION TO BE CONFIRMED AT TIME OF PURCHASE BASED ON CURRENT TECHNOLOGY AND MARKET AVAILABILITY.

LIGHTING SUPPLIER WILL NEED TO FURNISH SAMPLE OF FIXTURE WITH LAMP FOR REVIEW OF DIMMING AND COLOR TEMPERATURE BY OWNER, ARCHITECT, AND LIGHTING DESIGNER PRIOR TO FINALIZING SPECIFICATION.

RAZ — CONTRAST # S3450D-**/NW3000CM/SPL/ Read Item Notes Below!!

CANOPY OVERHANG

RECESSED SHOWER ADJUSTABLE ACCENT WITH FROSTED LENS, (1) 37W MR16 LAMP MAX., 4-7/16" DIAMETER TRIM WITH 2-5/8" APERTURE, HOUSING (NW3000CM): 13-1/2"L X 7-3/8"W X 3-11/16"D, 26° TILT, WET LOCATION, INTEGRAL TRANSFORMER. SEE NOTES FOR OPTIONS.

OR APPROVED EQUAL - SUBMIT CUT FOR APPROVAL

(1) 12W MAXIMUM LED MR16
2700K SPOT LAMP

KHS3450D
Code

'/SPL' and Item Notes

LIGHTING SUPPLIER TO FURNISH FIXTURE WITH MATTE WHITE TRIM (-11), CLEAR LENS (-C), MARINE GRADE TREATMENT (-MG), SPREAD LENS (SPREAD TBD), AND ROSCO DICHROIC COLOR FILTER (COLOR TBD).

LAMPING: (1) 12W MAXIMUM 2,700K LED MR16 REPLACEMENT LAMP - SPOT BEAM SPREAD - MINIMUM 400 LUMENS AND 5600 CBCP.

EXACT SPECIFICATION TO BE CONFIRMED AT TIME OF PURCHASE BASED ON CURRENT TECHNOLOGY AND MARKET AVAILABILITY.

LIGHTING SUPPLIER WILL NEED TO FURNISH SAMPLE OF FIXTURE WITH LAMP FOR REVIEW OF DIMMING AND COLOR TEMPERATURE BY OWNER, ARCHITECT, AND LIGHTING DESIGNER PRIOR TO FINALIZING SPECIFICATION.

Item_Type	*Manufacturer, Catalog Number*	
Location / Use	*Long Description*	*Manufacturer Notes*
	Item_Notes	*Lamp Description / Notes*

RBA

LOUNGE

CONTRAST # T3450-**-**/NW3000CM/SPL/ Read Item Notes Below!!

RECESSED DOWNLIGHT WITH REFLECTOR, (1) 50W MR16 LAMP MAX., 4-7/16" DIAMETER TRIM WITH 2-5/8" APERTURE, HOUSING (NW3000CM): 13-1/2"L X 7-3/8"W X 3-11/16"D, INTEGRAL TRANSFORMER, SEE NOTES FOR OPTIONS.

OR APPROVED EQUAL - SUBMIT CUT FOR APPROVAL

(1) 12W MAXIMUM LED MR16

2700K SPOT LAMP

JZS CONTR T3450
Code

'/SPL' and Item Notes

LIGHTING SUPPLIER TO FURNISH FIXTURE WITH MATTE WHITE TRIM (-11), PAINTED BLACK REFLECTOR (-02), LOUVER, SPREAD LENS (SPREAD TBD), AND ROSCO DICHROIC COLOR FILTER (COLOR TBD).

LAMPING: (1) 12W MAXIMUM 2,700K LED MR16 REPLACEMENT LAMP - SPOT BEAM SPREAD - MINIMUM 400 LUMENS AND 5600 CBCP.

EXACT SPECIFICATION TO BE CONFIRMED AT TIME OF PURCHASE BASED ON CURRENT TECHNOLOGY AND MARKET AVAILABILITY.

LIGHTING SUPPLIER WILL NEED TO FURNISH SAMPLE OF FIXTURE WITH LAMP FOR REVIEW OF DIMMING AND COLOR TEMPERATURE BY OWNER, ARCHITECT, AND LIGHTING DESIGNER PRIOR TO FINALIZING SPECIFICATION.

RJA

BBQ

Focus Industries # BQ-08-FD**-MR16120V-***/SPL/ Read Item Notes Below!!

EXTERIOR SURFACE MOUNTED BBQ LIGHT, 35W MAX MR16, 5"L x 2.6" DIAMETER BULLET, 24" LONG ARM, ON/OFF SWITCH, 120V INPUT.

OR APPROVED EQUAL - SUBMIT CUT FOR APPROVAL

(1) 35MR16/FL30

KHBQ08FD
Code

'/SPL' and Item Notes

LIGHTING SUPPLIER TO FURNISH FIXTURE WITH BLACK TEXTURE FINISH (-BLT).

RJB

TERRACE

BK LIGHTING # ARTISTAR AR-LED-TR-***/SPL/ Read Item Notes Below!!

EXTERIOR SURFACE MOUNTED LED ADJUSTABLE ACCENT, 8 WATT LED, 2-1/4" DIAMETER X 4-1/2"L HEAD MOUNTS TO 6"H STEM, LOCKING PAN AND TILT, ALUMINUM HOUSING, INTEGRAL MAGNETIC TRANSFORMER, SEE NOTES FOR OPTIONS.

OR APPROVED EQUAL - SUBMIT CUT FOR APPROVAL

() LED

CC-AR-LED
Code

'/SPL' and Item Notes

LIGHTING SUPPLIER TO FURNISH FIXTURE WITH 27K LED (-E36), MEDIUM FLOOD BEAM SPREAD (-MFL), STANDARD OUTPUT (-A9), BLACK SATIN FINISH (-BLP), 45° CAP (-A), 6" BASE (-6), POWER PIPE MOUNTING OPTION (-PP), SOFT FOCUS LENS (-12), AND HONEYCOMB BAFFLE (-11). LIGHTING SUPPLIER TO CONFIRM FINISH WITH DESIGN ARCHITECT PRIOR TO ORDERING.

RLY

BENCH

Luminii # SL7-**-*-SA/LL30WET-*-**K-SL-**-*/SPL/ Read Item Notes Below!!

WET LOCATION LINEAR LED TAPELIGHT IN LENSED EXTRUSION, 2.5 W/FT., 0.70"W X 0.28"H X VARIOUS LENGTHS, MULTIPLE LENS OPTIONS, LENSES AND END CAPS TO BE SILICONED, IP65, ETL CLASS II WET LISTED, REQUIRES REMOTE 24V MAGNETIC POWER SUPPLY.

OR APPROVED EQUAL - SUBMIT CUT FOR APPROVAL

() LED

KHSL7LL30WET
Code

'/SPL' and Item Notes

LIGHTING SUPPLIER TO FURNISH FIXTURE WITH FROSTED LENS (-F), STANDARD CRI (-S), 2700K COLOR TEMPERATURE (-27K), AND LENGTHS, MOUNTING ACCESSORIES, FEEDS, AND END CAPS AS REQUIRED FOR APPLICATION. LENSES AND END CAPS TO BE SILICONED FOR WET LOCATION APPLICATIONS.

Item_Type | *Manufacturer, Catalog Number*
Location / Use | *Long Description* | *Manufacturer Notes*
Item_Notes | *Lamp Description / Notes*

RLY-X — Luminii # DIMMING LED POWER SUPPLY PSD-**-24-***/SPL/ Read Item Notes Below!!

BENCH

CLASS-2 DC REGULATED DIMMABLE POWER SUPPLY, 120/240/277 VAC PRIMARY VOLTAGE, 24V DC SECONDARY VOLTAGE, MANUAL RESET OVERLOAD PROTECTION, U.L. LISTED. SEE NOTES FOR OPTIONS.

OR APPROVED EQUAL - SUBMIT CUT FOR APPROVAL

()

CH-PSD
Code

'/SPL' and Item Notes

LIGHTING SUPPLIER TO CONFIRM QUANTITY AND SIZE REQUIRED.

RLZ — IO LIGHTING # "LINE 1.5" 0-10-E-***-**-***-*-**-*-*/SPL/ Read Item Notes Below!!

PLANTER

EXTERIOR SURFACE MOUNT SINGLE COLOR LED STRIPLIGHT, 7.62W/FT MAX. FOR HIGH OUTPUT, 1.5" NOMINAL DIAMETER, 1.64"H X 1.67"W X VARIOUS LENGTHS OVERALL, EXTRUDED ALUMINUM HOUSING, WET LOCATION, REQUIRES REMOTE 24V DRIVER.

OR APPROVED EQUAL - SUBMIT CUT FOR APPROVAL

() LED

JK IO1.5
Code

'/SPL' and Item Notes

LIGHTING SUPPLIER TO FURNISH FIXTURE WITH 10° DISTRIBUTION (-10), SURFACE MOUNT OPTION (-100), AND STANDARD OUTPUT 2700K WARM WHITE LEDS (-27K). LIGHTING SUPPLIER TO CONFIRM ELECTRICAL FEED OPTION WITH INSTALLING CONTRACTOR.

RLZ-X — IO LIGHTING # 100D-2.0-11X4X4/SPL/ Read Item Notes Below!!

PLANTER

DIMMING MODULE AND POWER SUPPLY IN ENCLOSURE CONSISTING OF: 100W 120V/24VDC DRIVER, 0-10V DC DIMMING MODULE, AND MOLDED FIBERGLASS REINFORCED POLYESTER ENCLOSURE. ENCLOSURE DIMS: 3.82"W X 11/14"L X 3.9"H.

OR APPROVED EQUAL - SUBMIT CUT FOR APPROVAL

()

KH100D201144
Code

'/SPL' and Item Notes

LIGHTING SUPPLIER TO CONFIRM QUANTITY AND SIZE REQUIRED.

RUA — COLOR KINETICS # eW PROFILE POWERCORE-***/SPL/ Read Item Notes Below!!

KITCHEN

SURFACE MOUNTED LINEAR LINE VOLTAGE WHITE LED TASK LIGHT, 1.7"W X 0.88"H X VARIOUS LENGTHS, 105° X 100° SPREAD, "POWERCORE", 3000K OR 4000K LEDS, INTEGRAL CONNECTOR, 50FT. MAX. RUN LENGTH, ELV DIMMING.

OR APPROVED EQUAL - SUBMIT CUT FOR APPROVAL

() LED

BA-EWPROFILE
Code

'/SPL' and Item Notes

LIGHTING SUPPLIER TO FURNISH FIXTURE WITH 3000K LEDS, LENGTHS AS REQUIRED, AND LEADER CABLES, JUMPER CABLES, WIRING COMPARTMENTS, AND MOUNTING TRACK AS REQUIRED.

RUC — COLOR KINETICS # eW PROFILE POWERCORE-***/SPL/ Read Item Notes Below!!

CLOSET

SURFACE MOUNTED LINEAR LINE VOLTAGE WHITE LED TASK LIGHT, 1.7"W X 0.88"H X VARIOUS LENGTHS, 105° X 100° SPREAD, "POWERCORE", 3000K OR 4000K LEDS, INTEGRAL CONNECTOR, 50FT. MAX. RUN LENGTH, ELV DIMMING.

OR APPROVED EQUAL - SUBMIT CUT FOR APPROVAL

() LED

BA-EWPROFILE
Code

'/SPL' and Item Notes

LIGHTING SUPPLIER TO FURNISH FIXTURE WITH 3000K LEDS, LENGTHS AS REQUIRED, AND LEADER CABLES, JUMPER CABLES, WIRING COMPARTMENTS, AND MOUNTING TRACK AS REQUIRED.

DESIGN ARCHITECT'S FF&E SPECIFICATION INCLUDED FOR INFORMATION ABOUT LT-*** FIXTURES. DECORATIVE FIXTURES HAVE BEEN DESIGNED OR SELECTED BY DESIGN ARCHITECT. ALL QUANTITIES TO BE VERIFIED ON LATEST DRAWINGS.

LT-100 - ELEVATOR VESTIBULES AND LOBBY - DECORATIVE SCONCE - ALLOW 18 WATTS
LT-101 - ELEVATOR VESTIBULES - DECORATIVE PENDANT - ALLOW 60 WATTS
LT-102 - MAILROOM - DECORATIVE PENDANT - ALLOW 90 WATTS
LT-103 - LOBBY DESK - DECORATIVE PENDANT - ALLOW 35 WATTS
LT-104 - LOBBY SEATING - DECORATIVE PENDANT - ALLOW 140 WATTS
LT-105 - LOBBY SEATING - DECORATIVE PENDANT - ALLOW 18 WATTS
LT-106 - GYM RECEPTION - DECORATIVE PENDANT - ALLOW 72 WATTS
LT-107 - PLAYROOM - DECORATIVE PENDANT - ALLOW 18 WATTS
LT-108 - GYM CORRIDORS - DECORATIVE PENDANT - ALLOW 8 WATTS
LT-109 - GYM - DECORATIVE PENDANT - ALLOW 22 WATTS
LT-110 - GYM STUDIO - DECORATIVE PENDANT - ALLOW 56 WATTS
LT-111 - GYM CORRIDORS - DECORATIVE PENDANT - ALLOW 18 WATTS
LT-112 - LOCKER ROOMS & BATHROOMS - DECORATIVE SURFACE MOUNTED FIXTURE - ALLOW 18 WATTS
LT-113 - BATHROOMS - DECORATIVE SCONCE - ALLOW 18 WATTS
LT-114 - BASKETBALL COURT - DECORATIVE PENDANT - ALLOW 120 WATTS
LT-115 - THEATRE - DECORATIVE PENDANT - ALLOW 60 WATTS
LT-116 - GOLF LOUNGE - DECORATIVE PENDANT - ALLOW 36 WATTS
LT-117 - LIBRARY - DECORATIVE PENDANT - ALLOW 60 WATTS
LT-118 - LIBRARY - DECORATIVE PENDANT - ALLOW 78 WATTS
LT-119 - GAME ROOM - DECORATIVE PENDANT - ALLOW 36 WATTS
LT-120 - CRASH PAD CORRIDOR - DECORATIVE PENDANT - ALLOW 18 WATTS
LT-121 - LIBRARY - DECORATIVE SCONCE - ALLOW 18 WATTS
LT-123 - LIBRARY - DECORATIVE TABLE LAMP - ALLOW 36 WATTS
LT-125 - GYM STAIRWELL - DECORATIVE SCONCE - ALLOW 18 WATTS
LT-126 - TREATMENT ROOMS - DECORATIVE SCONCE - ALLOW 60 WATTS
LT-127 - BASKETBALL COURT - DECORATIVE SCONCE - ALLOW 18 WATTS
LT-129 - PAVILLION - DECORATIVE PENDANT - ALLOW 18 WATTS
LT-131 - LOUNGE - DECORATIVE PENDANT - ALLOW 18 WATTS
LT-132 - LOUNGE PDR - DECORATIVE PENDANT - ALLOW 18 WATTS
LT-133 - LOUNGE KITCHEN - DECORATIVE PENDANT - ALLOW 18 WATTS
LT-135 - LOBBY - DECORATIVE FLOOR LAMP - ALLOW 40 WATTS
LT-136 - LOBBY - DECORATIVE TABLE LAMP - ALLOW 40 WATTS
LT-137 - THEATRE - DECORATIVE TABLE LAMP - ALLOW 40 WATTS
LT-138 - LIBRARY - DECORATIVE TABLE LAMP - ALLOW 40 WATTS
LT-139 - LIBRARY - DECORATIVE FLOOR LAMP - ALLOW 40 WATTS
LT-140 - GOLF LOUNGE - DECORATIVE TABLE LAMP - ALLOW 40 WATTS
LT-141 - LOUNGE - DECORATIVE TABLE LAMP - ALLOW 40 WATTS
LT-142 - LOUNGE - DECORATIVE TABLE LAMP - ALLOW 40 WATTS
LT-143 - PAVILLION - DECORATIVE TABLE LAMP - ALLOW 40 WATTS
LT-144 - GAME ROOM - DECORATIVE TABLE LAMP - ALLOW 40 WATTS
LT-145 - LOUNGE - DECORATIVE TABLE LAMP - ALLOW 40 WATTS

DUE TO CONSTANTLY CHANGING LED TECHNOLOGY, PRIOR TO PURCHASING LAMPS, THE LIGHTING SUPPLIER MUST FURNISH A SAMPLE OF THE CURRENT GENERATION OF THE SPECIFIED LAMP (OR PROPOSED ALTERNATE) WITH THE FIXTURE (AND DIMMER IF APPLICABLE) TO TEST COLOR TEMPERATURE, DIMMABILITY, AND DIFFUSION IN FIXTURES WITH SHADES. SAMPLE MUST BE APPROVED BY OWNER, DESIGN ARCHITECT, AND LIGHTING DESIGNER PRIOR TO RELEASING LAMP ORDER.

RW STUDIO

FF&E SPECIFICATIONS
LIGHTING

PROJECT:	MANHATTAN WEST		
ITEM:	PENDANT	ITEM NO:	LT-100
LOCATION:	LOBBY CORRIDORS	DATE:	7.30.2014
REF. FLOOR PLAN:	*REFER TO LIGHTING	REVISED:	
REF. DRAWING NO:	CONSULTANTS DRAWINGS		

ITEM:

NAME / STYLE#: SPUN SCONCE
WALL MOUNTED LUMINERE

DIMENSIONS: 6 1/4" d x 4 3/8" h

MATERIAL: BRUSHED BRASS, BRUSHED COPPER, NATURAL OIL ON WOOD, BLACK/WHITE POWDERCOATED ALUMINUM REFLECTOR.

QUANTITY: 102

SOURCE: STANDARD SOCKET
WEBSITE: WWW.STANDARDSOCKET.COM
PHONE: 1.800.447.2046

PRICE: $375 RETAIL

LAMP:

BULB: A19 INCANDESCANT, A19 LED OR CFL
SOCKET TYPE: E26
MAX WATTAGE: 75 WATTS
QTY PER FIXTURE: 1

LAMPING: (1) 18W MAXIMUM 2,700K LED A19 REPLACEMENT LAMP - MINIMUM 1100 LUMENS.

NOTES:
- Refer to image for DIRECT purchase
- The quantities do not include overages & spares.
- Supplied items must be contract quality and suitable for commercial use.
- Fixture must meet all applicable codes.
- Fixture must be UL approved.

ROMAN AND WILLIAMS BUILDINGS AND INTERIORS
324 LAFAYETTE STREET 6TH FLR - NEW YORK, NY 10012 PH: 1. 212.625.3808 - FAX: 1. 212.625.3807 WWW.ROMANANDWILLIAMS.COM

RW STUDIO

FF&E SPECIFICATIONS
LIGHTING

PROJECT:	MANHATTAN WEST		
ITEM:	PENDANT	ITEM NO:	LT-101
LOCATION:	LOBBY CORRIDORS	DATE:	7.30.2014
REF. FLOOR PLAN:	*REFER TO LIGHTING	REVISED:	
REF. DRAWING NO:	CONSULTANTS DRAWINGS		

ITEM:

NAME / STYLE#: SATELLITE 6 MINI PENDANT

DIMENSIONS: 6" d x 22" h

MATERIAL: SATIN BRASS, CORD.

QUANTITY: 24

SOURCE: SANCTUM LIGHTING
WEBSITE: WWW.SANCTUMLIGHTING.COM

PRICE: $129 RETAIL

LAMP:

BULB: E12 INCANDESCANT
SOCKET TYPE: 120V CANDELABRA BASE
MAX WATTAGE: 60 WATTS
QTY PER FIXTURE: 1

LAMPING: (1) 60W MAXIMUM E12 CANDELABRA BASE LAMP

NOTES:

- Refer to image for DIRECT purchase
- The quantities do not include overages & spares.
- Supplied items must be contract quality and suitable for commercial use.
- Fixture must meet all applicable codes.
- Fixture must be UL approved.

ROMAN AND WILLIAMS BUILDINGS AND INTERIORS
324 LAFAYETTE STREET 6TH FLR - NEW YORK, NY 10012 PH: 1. 212.625.3808 - FAX: 1. 212.625.3807 WWW.ROMANANDWILLIAMS.COM

RW STUDIO

FF&E SPECIFICATIONS
LIGHTING

PROJECT:	**MANHATTAN WEST**		
ITEM:	**PENDANT**	ITEM NO:	**LT-102**
LOCATION:	**PREMIUM MAILROOM**	DATE:	**7.30.2014**
REF. FLOOR PLAN:	***REFER TO LIGHTING**	REVISED:	
REF. DRAWING NO:	**CONSULTANTS DRAWINGS**		

ITEM:

NAME / STYLE#: **SPUN PENDANT**
CEILING PENDANT LUMINERE

DIMENSIONS: **6-1/4"D x 4-1/4" H, 4" CANOPY**
8' CORD LENGTH

MATERIAL: **BRASS, COPPER, MAPLE WOOD**
BLACK/WHITE ALUMINUM REFLECTOR

QUANTITY: **5 PEDANTS TO BE CLUSTERED**

SOURCE: **STANDARD SOCKET**
WEBSITE: WWW.STANDARDSOCKET.COM

PRICE: **$450EA RETAIL**

LAMP:

BULB: **A19 INCANDESCANT, A19 LED OR CFL**
SOCKET TYPE: **E26**
MAX WATTAGE: **75 WATTS**
QTY PER FIXTURE: **1**

LAMPING: (5) 18W MAXIMUM 2,700K LED A19 REPLACEMENT LAMP - MINIMUM 1100 LUMENS.

NOTES:

- Refer to image for DIRECT purchase
- The quantities do not include overages & spares.
- Supplied items must be contract quality and suitable for commercial use.
- Fixture must meet all applicable codes.
- Fixture must be UL approved.

ROMAN AND WILLIAMS BUILDINGS AND INTERIORS
324 LAFAYETTE STREET 6TH FLR - NEW YORK, NY 10012 PH: 1. 212.625.3808 - FAX: 1. 212.625.3807 WWW.ROMANANDWILLIAMS.COM

RW STUDIO

FF&E SPECIFICATIONS
LIGHTING

PROJECT:	MANHATTAN WEST		
ITEM:	PENDANT	ITEM NO:	LT-103
LOCATION:	LOBBY RECEPTION	DATE:	7.30.2014
REF. FLOOR PLAN:	*REFER TO LIGHTING	REVISED:	
REF. DRAWING NO:	CONSULTANTS DRAWINGS		

ITEM:

NAME / STYLE#: ANGLE PENDANT COLLECTION
SINGLE ANGLE PENDANT

DIMENSIONS: 5" L x 25" H (Bulb Height: 7 7/8")

MATERIAL: SATIN BRASS, OPALINE GLASS

QUANTITY: 2

SOURCE: THE FUTURE PERFECT
CONTACT: SUSAN CLARK
PHONE: 212.473.2500
EMAIL: susan@thefutureperfect.com

PRICE: $2495ea RETAIL

LAMP:

BULB: G9 - FROSTED HALOGEN
QTY PER FIXTURE: 1
MAX WATTAGE: 35W

LAMPING: (1) 35W G9 FROSTED HALOGEN LAMP

NOTES:

- Refer to image for DIRECT purchase
- The quantities do not include overages & spares.
- Supplied items must be contract quality and suitable for commercial use.
- Fixture must meet all applicable codes.
- Fixture must be UL approved.

ROMAN AND WILLIAMS BUILDINGS AND INTERIORS
324 LAFAYETTE STREET 6TH FLR - NEW YORK, NY 10012 PH: 1. 212.625.3808 - FAX: 1. 212.625.3807 WWW.ROMANANDWILLIAMS.COM

RW STUDIO

FF&E SPECIFICATIONS
LIGHTING

PROJECT:	MANHATTAN WEST		
ITEM:	PENDANT	ITEM NO:	LT-104
LOCATION:	LOBBY FEATURE PENDANT	DATE:	7.30.2014
REF. FLOOR PLAN:	*REFER TO LIGHTING	REVISED:	
REF. DRAWING NO:	CONSULTANTS DRAWINGS		

ITEM:

NAME / STYLE#: ANGLE PENDANT COLLECTION
CUSTOM 4 GLOBE ANGLE PENDANT

DIMENSIONS: TBD

MATERIAL: SATIN BRASS, OPALINE GLASS

QUANTITY: 1

SOURCE: THE FUTURE PERFECT
CONTACT: SUSAN CLARK
PHONE: 212.473.2500
EMAIL: susan@thefutureperfect.com

PRICE: TBD

LAMP:

BULB: G9 - FROSTED HALOGEN
QTY PER FIXTURE: 4
MAX WATTAGE: 35W

LAMPING: (4) 35W G9 FROSTED HALOGEN LAMP

NOTE: THIS ITEM IS CURRETLY SOLD AS A THREE TIER AND NEEDS TO BE CUSTOMIZED BY MANUFACTURER

NOTES:

- Refer to image for DIRECT purchase
- The quantities do not include overages & spares.
- Supplied items must be contract quality and suitable for commercial use.
- Fixture must meet all applicable codes.
- Fixture must be UL approved.

ROMAN AND WILLIAMS BUILDINGS AND INTERIORS
324 LAFAYETTE STREET 6TH FLR - NEW YORK, NY 10012 PH: 1. 212.625.3808 - FAX: 1. 212.625.3807 WWW.ROMANANDWILLIAMS.COM

RW STUDIO

FF&E SPECIFICATIONS
LIGHTING

PROJECT:	MANHATTAN WEST		
ITEM:	PENDANT	ITEM NO:	LT-105
LOCATION:	LOBBY PENDANT	DATE:	7.30.2014
REF. FLOOR PLAN:	*REFER TO LIGHTING	REVISED:	
REF. DRAWING NO:	CONSULTANTS DRAWINGS		

ITEM:

NAME / STYLE#: LUNA CLEAR WITH NATURAL BRASS ROD

DIMENSIONS: 10"Dia. Shade x 21-27"H

MATERIAL: BRASS, OPAL GLASS

QUANTITY: 4

SOURCE: SCHOOLHOUSE ELECTRIC
PHONE: P: 212-226-6113
WEBSITE: www.schoolhouseelectric.com/

PRICE: $189 RETAIL

LAMP:

BULB: A19 INCANDESCANT OR EDISON
MAX WATTAGE: 60 WATTS
QTY PER FIXTURE: 1
SOCKET: E26

LAMPING: (1) 18W MAXIMUM 2,700K LED A19 REPLACEMENT LAMP - MINIMUM 1100 LUMENS.

NOTE: SUBSTITUTE OPAL GLASS SHADE FOR CLEAR GLASS SHADE- 10" DIA, #OP-2410-10-4

PRICE: $55 RETAIL

*IMAGE DOES NOT REFLECT INTENDED SHADE FINISH

NOTES:

- Refer to image for DIRECT purchase
- The quantities do not include overages & spares.
- Supplied items must be contract quality and suitable for commercial use.
- Fixture must meet all applicable codes.
- Fixture must be UL approved.

ROMAN AND WILLIAMS BUILDINGS AND INTERIORS
324 LAFAYETTE STREET 6TH FLR - NEW YORK, NY 10012 PH: 1. 212.625.3808 - FAX: 1. 212.625.3807 WWW.ROMANANDWILLIAMS.COM

RW STUDIO

FF&E SPECIFICATIONS
LIGHTING

PROJECT:	MANHATTAN WEST		
ITEM:	PENDANT	ITEM NO:	LT-106
LOCATION:	SECOND FLOOR RECEPTION	DATE:	7.30.2014
REF. FLOOR PLAN:	*REFER TO LIGHTING	REVISED:	
REF. DRAWING NO:	CONSULTANTS DRAWINGS		

ITEM:

NAME / STYLE#: LIGHT THREE
NATURAL BLACK

DIMENSIONS: 114"L x 10"T x 6"W
(CUSTOM LENGTH REQUIRED)

MATERIAL: STEEL, ACRYLIC DIFFUSER

QUANTITY: 1

LAMP:

BULB: MED BASE (INCANDESCANT/CFL/LED)
QTY PER FIXTURE: 4
MAX WATTAGE: 60W PER SOCKET

LAMPING: (4) 18W MAXIMUM 2,700K LED A19 REPLACEMENT LAMP - MINIMUM 1100 LUMENS.

SOURCE:	PAPER AND STEEL-JOHN BECK STEEL	NOTE:	TO BE CUSTOMIZED
CONTACT:	JOHN BECK		TO 114"L
PHONE:	618.692.7229		TO COORDINATE WITH
WEBSITE:	WWW.JOHNBECKSTEEL.COM		RECEPTION DESK

PRICE: $750 RETAIL

NOTES:

- Refer to image for DIRECT purchase
- The quantities do not include overages & spares.
- Supplied items must be contract quality and suitable for commercial use.
- Fixture must meet all applicable codes.
- Fixture must be UL approved.

ROMAN AND WILLIAMS BUILDINGS AND INTERIORS
324 LAFAYETTE STREET 6TH FLR - NEW YORK, NY 10012 PH: 1. 212.625.3808 - FAX: 1. 212.625.3807 WWW.ROMANANDWILLIAMS.COM

RW STUDIO

FF&E SPECIFICATIONS
LIGHTING

PROJECT:	MANHATTAN WEST		
ITEM:	PENDANT	ITEM NO:	LT-107
LOCATION:	KIDS PLAYROOM	DATE:	7.30.2014
REF. FLOOR PLAN:	*REFER TO LIGHTING	REVISED:	
REF. DRAWING NO:	CONSULTANTS DRAWINGS		

ITEM:

NAME / STYLE#: BBI ALUMINUM PENDANT ORIGINAL BTC

DIMENSIONS: 11.8"dia x 11.8"H - 5' Cord

MATERIAL: ALUMINUM, CLOTH CORD

QUANTITY: 2 AQUAMARINE, 3 YELLOW

SOURCE: HORNE LIGHTING
WEBSITE: WWW.SHOPHORNE.COM
PHONE: 1.877.404.6763

PRICE: $395 RETAIL

LAMP:

BULB: INCANDESCANT OR CFL
MAX WATTAGE: 100 WATTS
QTY PER FIXTURE: 1
SOCKET: MED BASE

LAMPING: (1) 18W MAXIMUM 2,700K LED A19 REPLACEMENT LAMP - MINIMUM 1100 LUMENS.

NOTES:

- Refer to image for DIRECT purchase
- The quantities do not include overages & spares.
- Supplied items must be contract quality and suitable for commercial use.
- Fixture must meet all applicable codes.
- Fixture must be UL approved.

ROMAN AND WILLIAMS BUILDINGS AND INTERIORS
324 LAFAYETTE STREET 6TH FLR - NEW YORK, NY 10012 PH: 1. 212.625.3808 - FAX: 1. 212.625.3807 WWW.ROMANANDWILLIAMS.COM

RW STUDIO

FF&E SPECIFICATIONS
LIGHTING

PROJECT:	MANHATTAN WEST		
ITEM:	PENDANT	ITEM NO:	LT-108
LOCATION:	2ND FLOOR CORRIDOR PENDANT	DATE:	7.30.2014
REF. FLOOR PLAN:	*REFER TO LIGHTING	REVISED:	
REF. DRAWING NO:	CONSULTANTS DRAWINGS		

ITEM:

NAME / STYLE#: BL9M PENDANT
BESTLITE

DIMENSIONS: SHADE DIA: 8.3"
CORD LENGTH: 98.5"

MATERIAL: METAL SHADE, BRASS FITTINGS

QUANTITY: 29

SOURCE: HORNE LIGHTING
WEBSITE: WWW.SHOPHORNE.COM
PHONE: 1.877.404.6763

PRICE: $359 RETAIL

LAMP:

BULB: E12 GLOBE INCANDESCANT
MAX WATTAGE: 40 WATTS
QTY PER FIXTURE: 1
SOCKET: CANDLEABRA BASE

LAMPING: (1) 8W MAXIMUM 2,700K LED G16 REPLACEMENT LAMP - MINIMUM 400 LUMENS.

NOTES:

- Refer to image for DIRECT purchase
- The quantities do not include overages & spares.
- Supplied items must be contract quality and suitable for commercial use.
- Fixture must meet all applicable codes.
- Fixture must be UL approved.

ROMAN AND WILLIAMS BUILDINGS AND INTERIORS
324 LAFAYETTE STREET 6TH FLR - NEW YORK, NY 10012 PH: 1. 212.625.3808 - FAX: 1. 212.625.3807 WWW.ROMANANDWILLIAMS.COM

RW STUDIO

FF&E SPECIFICATIONS
LIGHTING

PROJECT:	**MANHATTAN WEST**		
ITEM:	**PENDANT**	ITEM NO:	**LT-109**
LOCATION:	**SECOND FLOOR LINEAR**	DATE:	**7.28.2014**
REF. FLOOR PLAN:	***REFER TO LIGHTING**	REVISED:	
REF. DRAWING NO:	**CONSULTANTS DRAWINGS**		

ITEM:

NAME / STYLE#: **DUBLIN PENDANT**
PRODUCT #: 001-802-DUBLIN

DIMENSIONS: **39 1/4" W X 6" DEEP by 30" H**

MATERIAL: **INDUSTRIAL STEEL**

QUANTITY: **99**

SOURCE: **CONANT METAL AND LIGHT**
EMAIL: INFO@CONANTMETALANDLIGHT.COM
PHONE: **1.800.832.4482**

PRICE: **$750 RETAIL**

LAMP:

BULB: **INCANDESCANT OR CFL**
MAX WATTAGE: **100 WATTS**
QTY PER FIXTURE: **1**
SOCKET: **MED BASE**

LAMPING: (2) 11W MAXIMUM 2,700K LED LAMPS

The fixture is shown with the optional LED 2700K dimmable 11 watt tubular LED bulbs,

NOTE: **PLEASE REQUEST FIXTURE TO BE NON-DIMMABLE LAMPING**

NOTES:

- Refer to image for DIRECT purchase
- The quantities do not include overages & spares.
- Supplied items must be contract quality and suitable for commercial use.
- Fixture must meet all applicable codes.
- Fixture must be UL approved.

ROMAN AND WILLIAMS BUILDINGS AND INTERIORS
324 LAFAYETTE STREET 6TH FLR - NEW YORK, NY 10012 PH: 1. 212.625.3808 - FAX: 1. 212.625.3807 WWW.ROMANANDWILLIAMS.COM

RW STUDIO

FF&E SPECIFICATIONS
LIGHTING

PROJECT:	MANHATTAN WEST		
ITEM:	LINEAR PENDANT	ITEM NO:	LT-110
LOCATION:	STUDIO	DATE:	7.30.2014
REF. FLOOR PLAN:	*REFER TO LIGHTING	REVISED:	7.10.2014
REF. DRAWING NO:	CONSULTANTS DRAWINGS		

ITEM:

NAME / STYLE#: HBEAM3.5
SUSPENDED

COLOR: POWDERCOAT WHITE

DIMENSIONS: 6" T X 3-3/4" W X 2'-0" +
(VARYING LENGTH DIMENSIONS)

MATERIAL: METAL

QUANTITY: TBD

SOURCE:
CONTACT: HOWARD HOPKINS
ARCHITECTURAL LIGHTING WORKS
howard@alwusa.com
215-280-0561

PRICE: $470-$800

LAMP:

BULB: VARIOUS LAMPING OPTIONS
WATTAGE: LED, FLOURESCANT OR HALOGEN

LIGHTING DESIGNER TO ADVISE

LAMPING: FURNISH FIXTURE WITH INTEGRAL 3,000K DIMMABLE LEDS FOR BOTH DIRECT AND INDIRECT LAMPING OPTIONS.

TOTAL FIXTURE WATTAGE NOT TO EXCEED 56 WATTS

FIXTURE SUPPLIER TO CONFIRM DIMMABLE TRANSFORMER TYPE AND COORDINATE REQUIRED NUMBER OF WIRES TO DIMMER WITH ELECTRICAL CONTRACTOR AND DIMMER SUPPLIER.

NOTES:

- Refer to image for DIRECT purchase
- The quantities do not include overages & spares.
- Supplied items must be contract quality and suitable for commercial use.
- Fixture must meet all applicable codes.
- Fixture must be UL approved.

ROMAN AND WILLIAMS BUILDINGS AND INTERIORS
324 LAFAYETTE STREET 6TH FLR - NEW YORK, NY 10012 PH: 1. 212.625.3808 - FAX: 1. 212.625.3807 WWW.ROMANANDWILLIAMS.COM

RW STUDIO

FF&E SPECIFICATIONS
LIGHTING

PROJECT:	**MANHATTAN WEST**		
ITEM:	**PENDANT**	ITEM NO:	**LT-111**
LOCATION:	**GYM CORRIDOR**	DATE:	**7.30.2014**
REF. FLOOR PLAN:	***REFER TO LIGHTING**	REVISED:	
REF. DRAWING NO:	**CONSULTANTS DRAWINGS**		

ITEM:

NAME / STYLE#: **FACTORY LIGHT NO.7 ROD**
PRODUCT SKU: 252.0057.16R

DIMENSIONS: **16" Dia x 4.75" W**

MATERIAL: **ENAMALED STEEL**

QUANTITY: **9**

SOURCE: **SCHOOLHOUSE ELECTRIC**
WEBSITE: WWW.SCHOOLHOUSEELECTRIC.COM
PHONE: **212-226-6113**

PRICE: **$319 RETAIL**

LAMP:

BULB: **INCANDESCANT**
MAX WATTAGE: **150 WATTS**
QTY PER FIXTURE: **1**
SOCKET: **MED BASE**

LAMPING: (1) 18W MAXIMUM 2,700K LED A19 REPLACEMENT LAMP - MINIMUM 1100 LUMENS.

NOTE: **WHEN PURCHASING PLEASE CHOOSE FACTORY WHITE ROD AND BLACK CAGE OPTION.**

NOTES:

- Refer to image for DIRECT purchase
- The quantities do not include overages & spares.
- Supplied items must be contract quality and suitable for commercial use.
- Fixture must meet all applicable codes.
- Fixture must be UL approved.

ROMAN AND WILLIAMS BUILDINGS AND INTERIORS
324 LAFAYETTE STREET 6TH FLR - NEW YORK, NY 10012 PH: 1. 212.625.3808 - FAX: 1. 212.625.3807 WWW.ROMANANDWILLIAMS.COM

RW STUDIO

FF&E SPECIFICATIONS
LIGHTING

PROJECT:	MANHATTAN WEST		
ITEM:	PENDANT	ITEM NO:	LT-112
LOCATION:	BATHROOM PENDANTS	DATE:	7.30.2014
REF. FLOOR PLAN:	*REFER TO LIGHTING	REVISED:	
REF. DRAWING NO:	CONSULTANTS DRAWINGS		

ITEM:

NAME / STYLE#:	THE BREWSTER PENDANT CODE: BLE-C-ULBR-PC
DIMENSIONS:	6"W x 10-3/4"T 8" CORD
MATERIAL:	METAL
FINISH:	100 BLACK
CORD:	STANDARD BLACK SBK
CANOPY:	SAME AS SHADE
GLASS:	CLEAR GLASS
QUANTITY:	33
SOURCE:	BARN LIGHT ELECTRIC WWW.BARNLIGHTELECTRIC.COM 212-226-6113
PRICE:	$190 RETAIL

LAMP:

BULB:	INCANDESCANT
MAX WATTAGE:	100 WATTS
QTY PER FIXTURE:	1
SOCKET:	MED BASE

LAMPING: (1) 18W MAXIMUM 2,700K LED A19 REPLACEMENT LAMP - MINIMUM 1100 LUMENS.

NOTES:

- Refer to image for DIRECT purchase
- The quantities do not include overages & spares.
- Supplied items must be contract quality and suitable for commercial use.
- Fixture must meet all applicable codes.
- Fixture must be UL approved.

ROMAN AND WILLIAMS BUILDINGS AND INTERIORS
324 LAFAYETTE STREET 6TH FLR - NEW YORK, NY 10012 PH: 1. 212.625.3808 - FAX: 1. 212.625.3807 WWW.ROMANANDWILLIAMS.COM

RW STUDIO

FF&E SPECIFICATIONS
LIGHTING

PROJECT:	MANHATTAN WEST		
ITEM:	SCONCE	ITEM NO:	LT-113
LOCATION:	BATHROOMS	DATE:	7.30.2014
REF. FLOOR PLAN:	*REFER TO LIGHTING	REVISED:	7.10.2014
REF. DRAWING NO:	CONSULTANTS DRAWINGS		

ITEM:

NAME / STYLE#: WEATHERPROOF SHIP'S WELL GLASS LIGHT 7401/BR/WE/FR

DIMENSIONS: 4.7" X 10.2"

MATERIAL: BRONZE
FROSTED GLASS

QUANTITY: 24

SOURCE: DAVEY LIGHTING
sales@davey-lighting.co.uk
441993882251

PRICE: $543.00

LAMP:

BASE; B-22
WATTAGE: 60W
LAMP: GLS BULB

LAMPING: (1) 18W MAXIMUM 2,700K LED A19 REPLACEMENT LAMP - MINIMUM 1100 LUMENS.

NOTES:

- Refer to image for DIRECT purchase
- The quantities do not include overages & spares.
- Supplied items must be contract quality and suitable for commercial use.
- Fixture must meet all applicable codes.
- Fixture must be UL approved.

ROMAN AND WILLIAMS BUILDINGS AND INTERIORS
324 LAFAYETTE STREET 6TH FLR - NEW YORK, NY 10012 PH: 1. 212.625.3808 - FAX: 1. 212.625.3807 WWW.ROMANANDWILLIAMS.COM

RW STUDIO

FF&E SPECIFICATIONS
LIGHTING

PROJECT:	MANHATTAN WEST		
ITEM:	INDUCTION LIGHTING	ITEM NO:	LT-114
LOCATION:	GYM	DATE:	7.30.2014
REF. FLOOR PLAN:	*REFER TO LIGHTING	REVISED:	7.10.2014
REF. DRAWING NO:	CONSULTANTS DRAWINGS		

ITEM:

NAME / STYLE#: INDUCTION HIGH BAY FIXTURE
UNIVERSAL 120-277 BALLAST
Item #: WL-IN12L16CDS

DIMENSIONS: 16 INCH ALUMINUM REFLECTOR

MATERIAL: ALUMINUM, POWDER COATED ALUMINUM

QUANTITY: 28

SOURCE: WAREHOUSE LIGHTING
info@warehouse-lighting.com
888-454-4480

PRICE: $395.77 RETAIL

LAMP:

LUMENS: 10100
CRI 82-85
WATTAGE: 120 WATT

COLOR TEMP: 2700/3500/4000/5000/6500

LAMPING: 2700K METAL HALIDE LAMP - CONFIRM LAMP BASE AND BALLAST WITH FIXTURE MANUFACTURER.

NOTES:
- Refer to image for DIRECT purchase
- The quantities do not include overages & spares.
- Supplied items must be contract quality and suitable for commercial use.
- Fixture must meet all applicable codes.
- Fixture must be UL approved.

ROMAN AND WILLIAMS BUILDINGS AND INTERIORS
324 LAFAYETTE STREET 6TH FLR - NEW YORK, NY 10012 PH: 1. 212.625.3808 - FAX: 1. 212.625.3807 WWW.ROMANANDWILLIAMS.COM

RW STUDIO

FF&E SPECIFICATIONS
LIGHTING

PROJECT:	MANHATTAN WEST		
ITEM:	FLUSHMOUNT	ITEM NO:	LT-115
LOCATION:	CRASH ROOM	DATE:	7.30.2014
REF. FLOOR PLAN:	*REFER TO LIGHTING	REVISED:	
REF. DRAWING NO:	CONSULTANTS DRAWINGS		

ITEM:

NAME / STYLE#: TWILIGHT VINTAGE PLATNUM
FLUSHMOUNG CEILING LIGHT
Item #: HUB-TWILIGHT-VINTAGE-PLAT-FLUSH
MODEL: 124910
FINISH: 82 - VINTAGE PLATNUM

DIMENSIONS: 6"W x 10-3/4"T
8" CORD

MATERIAL: METAL

QUANTITY: 14

SOURCE: Y LIGHTING
PHONE: 866.428.9289
EMAIL: CUSTOMERSERVICE@YLIGHTING.COM

PRICE: $300 RETAIL

LAMP:

BULB: G9 HALOGEN OR INCANDESCANT
MAX WATTAGE: 60 WATTS
QTY PER FIXTURE: 1 (INCLUDED)

LAMPING: (1) 60W G9 HALOGEN LAMP

NOTES:
- Refer to image for DIRECT purchase
- The quantities do not include overages & spares.
- Supplied items must be contract quality and suitable for commercial use.
- Fixture must meet all applicable codes.
- Fixture must be UL approved.

ROMAN AND WILLIAMS BUILDINGS AND INTERIORS
324 LAFAYETTE STREET 6TH FLR - NEW YORK, NY 10012 PH: 1. 212.625.3808 - FAX: 1. 212.625.3807 WWW.ROMANANDWILLIAMS.COM

RW STUDIO

FF&E SPECIFICATIONS
LIGHTING

PROJECT:	MANHATTAN WEST		
ITEM:	FLUSHMOUNT	ITEM NO:	LT-116
LOCATION:	GOLF	DATE:	7.30.2014
REF. FLOOR PLAN:	*REFER TO LIGHTING	REVISED:	7.10.2014
REF. DRAWING NO:	CONSULTANTS DRAWINGS		

ITEM:

NAME / STYLE#: CARPYEN BOOP CEILING LIGHT
ITEM: TGO-C-BOOP-WALL-CEILING-LIGHT

DIMENSIONS: 14.6" X 4"

COLOR: BLACK EXTERIOR, WHITE INTERIOR

MATERIAL: METAL, GLASS

QUANTITY: 2

SOURCE: Y LIGHTING
PHONE: 866.428.9289
EMAIL: CUSTOMERSERVICE@YLIGHTING.COM

PRICE: $536.80 RETAIL

LAMP:

BULB: INCANDESCANT
WATTAGE: 2 X 22W EA
BASE: MEDIUM E26

LAMPING: (2) 18W MAXIMUM 2,700K LED A19 REPLACEMENT LAMP - MINIMUM 1100 LUMENS.

NOTES:

- Refer to image for DIRECT purchase
- The quantities do not include overages & spares.
- Supplied items must be contract quality and suitable for commercial use.
- Fixture must meet all applicable codes.
- Fixture must be UL approved.

ROMAN AND WILLIAMS BUILDINGS AND INTERIORS
324 LAFAYETTE STREET 6TH FLR - NEW YORK, NY 10012 PH: 1. 212.625.3808 - FAX: 1. 212.625.3807 WWW.ROMANANDWILLIAMS.COM

RW STUDIO

FF&E SPECIFICATIONS
LIGHTING

PROJECT:	MANHATTAN WEST		
ITEM:	PENDANT	ITEM NO:	LT-117
LOCATION:	LIBRARY LOUNGE	DATE:	7.30.2014
REF. FLOOR PLAN:	*REFER TO LIGHTING	REVISED:	
REF. DRAWING NO:	CONSULTANTS DRAWINGS		

ITEM:

NAME / STYLE#: SEMI PENDANT SM2
GUBI
FINISH-MATTE WHITE

DIMENSIONS: SHADE HEIGHT: 9.4"
SHADE DIA: 18.5"
CORD LENGTH: 7'

MATERIAL: SPUN ALUMINUM,
POLYESTER WOVEN CORD

QUANTITY: 6

SOURCE: HORNE LIGHTING
WEBSITE: WWW.SHOPHORNE.COM
PHONE: 1.877.404.6763

PRICE: $399 RETAIL

LAMP:

BULB: HALF MIRROR INCANDESCANT
MAX WATTAGE: 60 WATTS
QTY PER FIXTURE: 1
SOCKET: E26 BASE

LAMPING: (1) 60W SILVER BOWL LAMP

NOTES:
- Refer to image for DIRECT purchase
- The quantities do not include overages & spares.
- Supplied items must be contract quality and suitable for commercial use.
- Fixture must meet all applicable codes.
- Fixture must be UL approved.

ROMAN AND WILLIAMS BUILDINGS AND INTERIORS
324 LAFAYETTE STREET 6TH FLR - NEW YORK, NY 10012 PH: 1. 212.625.3808 - FAX: 1. 212.625.3807 WWW.ROMANANDWILLIAMS.COM

RW STUDIO

FF&E SPECIFICATIONS
LIGHTING

PROJECT:	MANHATTAN WEST		
ITEM:	PENDANT	ITEM NO:	LT-118
LOCATION:	LIBRARY LINEAR PENDANT	DATE:	7.30.2014
REF. FLOOR PLAN:	*REFER TO LIGHTING	REVISED:	
REF. DRAWING NO:	CONSULTANTS DRAWINGS		

ITEM:

NAME / STYLE#: ZHANE LINEAR SUSPENSION
BY TECH LIGHTING
MODEL #:700LSZHN-CF

DIMENSIONS: 38.5" L X 3" H X 4" W

MATERIAL: METAL
ACRYLIC DIFFUSER
FINISH: BLACK

QUANTITY: 3

SOURCE: ALCON LIGHTING
PHONE: 1.877.733.5326
WEBSITE: www.alconlighting.com/

PRICE: $619.95 RETAIL

LAMP:

BULB: T5 LINEAR FLOURESCANT
MAX WATTAGE: 2X 39 WATTS
QTY PER FIXTURE: 2

LAMPING: (2) 39W T5 2,700K FLUORESCENT LAMPS

NOTES:

- Refer to image for DIRECT purchase
- The quantities do not include overages & spares.
- Supplied items must be contract quality and suitable for commercial use.
- Fixture must meet all applicable codes.
- Fixture must be UL approved.

ROMAN AND WILLIAMS BUILDINGS AND INTERIORS
324 LAFAYETTE STREET 6TH FLR - NEW YORK, NY 10012 PH: 1. 212.625.3808 - FAX: 1. 212.625.3807 WWW.ROMANANDWILLIAMS.COM

RW STUDIO

FF&E SPECIFICATIONS
LIGHTING

PROJECT:	MANHATTAN WEST		
ITEM:	PENDANT	ITEM NO:	LT-119
LOCATION:	GAME ROOM-POOL TABLES	DATE:	7.30.2014
REF. FLOOR PLAN:	*REFER TO LIGHTING	REVISED:	
REF. DRAWING NO:	CONSULTANTS DRAWINGS		

ITEM:

NAME / STYLE#: MALPLAQUET DOUBLE
MODEL:SG-1227HR

LAMP:

BULB: STANDARD INCANDESCANT
MAX WATTAGE: 60 WATTS
QTY PER FIXTURE: 2

DIMENSIONS: 17" EA. SHADE 51" W x 48" H WITH ADJUSTABLE STEM

LAMPING: (2) 18W MAXIMUM 2,700K LED A19 REPLACEMENT LAMP - MINIMUM 1100 LUMENS.

MATERIAL: POWDERCOATED METAL
FINISH: STANDARD WHITE (WH)

QUANTITY: 2

SOURCE: THE URBAN ELECTRIC CO
EMAIL: SALES@URBANELECTRICCO.COM
PHONE: 843.723.8140

PRICE: $5580 NET

NOTES:

- Refer to image for DIRECT purchase
- The quantities do not include overages & spares.
- Supplied items must be contract quality and suitable for commercial use.
- Fixture must meet all applicable codes.
- Fixture must be UL approved.

ROMAN AND WILLIAMS BUILDINGS AND INTERIORS
324 LAFAYETTE STREET 6TH FLR - NEW YORK, NY 10012 PH: 1. 212.625.3808 - FAX: 1. 212.625.3807 WWW.ROMANANDWILLIAMS.COM

RW STUDIO

FF&E SPECIFICATIONS
LIGHTING

PROJECT:	MANHATTAN WEST		
ITEM:	PENDANT	ITEM NO:	LT-120
LOCATION:	GAME ROOM SMALL PENDANT	DATE:	7.30.2014
REF. FLOOR PLAN:	*REFER TO LIGHTING	REVISED:	
REF. DRAWING NO:	CONSULTANTS DRAWINGS		

ITEM:

NAME / STYLE#: BRUSHED STEEL GLASS PENDANT
CODE: 30P1239BS/GW

DIMENSIONS: 5" DIA. SHADE X 10" H ADJUSTABLE STEM

MATERIAL: BRUSHED STEEL/GLOSS WHITE SHADE
FINISH:

QUANTITY: 5

SOURCE: BARN LIGHT ELECTRIC
WEBSITE: WWW.BARNLIGHTELECTRIC.COM
PHONE: P: 212-226-6113

PRICE: $170 NET

LAMP:

BULB: STANDARD INCANDESCANT
MAX WATTAGE: 60W
QTY PER FIXTURE: 1

LAMPING: (1) 18W MAXIMUM 2,700K LED A19 REPLACEMENT LAMP - MINIMUM 1100 LUMENS.

NOTES:

- Refer to image for DIRECT purchase
- The quantities do not include overages & spares.
- Supplied items must be contract quality and suitable for commercial use.
- Fixture must meet all applicable codes.
- Fixture must be UL approved.

ROMAN AND WILLIAMS BUILDINGS AND INTERIORS
324 LAFAYETTE STREET 6TH FLR - NEW YORK, NY 10012 PH: 1. 212.625.3808 - FAX: 1. 212.625.3807 WWW.ROMANANDWILLIAMS.COM

RW STUDIO

FF&E SPECIFICATIONS
LIGHTING

PROJECT:	MANHATTAN WEST		
ITEM:	PENDANT	ITEM NO:	LT-121
LOCATION:	LIBRARY SCONCE	DATE:	7.30.2014
REF. FLOOR PLAN:	*REFER TO LIGHTING	REVISED:	
REF. DRAWING NO:	CONSULTANTS DRAWINGS		

ITEM:

NAME / STYLE#: LAMBOLL
UE-1100

DIMENSIONS: 9"W X 4" H X 4" D

MATERIAL: METAL SHADE
FINISH: STANDARD FINISH: TBD

QUANTITY: 8

SOURCE: THE URBAN ELECTRIC CO
EMAIL: SALES@URBANELECTRICCO.COM
PHONE: 843.723.8140

PRICE: $485 RETAIL

LAMP:

BULB: STANDARD INCANDESCANT
MAX WATTAGE: 60 WATTS
QTY PER FIXTURE: 1

LAMPING: (1) 18W MAXIMUM 2,700K LED A19 REPLACEMENT LAMP - MINIMUM 1100 LUMENS.

NOTES:

- Refer to image for DIRECT purchase
- The quantities do not include overages & spares.
- Supplied items must be contract quality and suitable for commercial use.
- Fixture must meet all applicable codes.
- Fixture must be UL approved.

ROMAN AND WILLIAMS BUILDINGS AND INTERIORS
324 LAFAYETTE STREET 6TH FLR - NEW YORK, NY 10012 PH: 1. 212.625.3808 - FAX: 1. 212.625.3807 WWW.ROMANANDWILLIAMS.COM

RW STUDIO

FF&E SPECIFICATIONS
LIGHTING

PROJECT:	**MANHATTAN WEST**		
ITEM:	**TABLE LAMP**	ITEM NO:	**LT-123**
LOCATION:	**LIBRARY**	DATE:	**7.30.2014**
REF. FLOOR PLAN:	***REFER TO LIGHTING CONSULTANTS DWG.**	REVISED:	
REF. DRAWING NO:	**LT-123**		

ITEM:

NAME / STYLE#: **CUSTOM TABLE LAMP**

DIMENSIONS: **REFER TO LT-123**

MATERIAL: **ALUMINUM**
FINISH: **UNFINISHED**

QUANTITY: **6**

SOURCE: **TO BID**

LAMP:

BULB: **STANDARD INCANDESCANT**
MAX WATTAGE: **60 WATT**
QTY PER FIXTURE: **2**
SOCKET: **MEDIUM BASE (2)**

LAMPING: (2) 18W MAXIMUM 2,700K LED A19 REPLACEMENT LAMP - MINIMUM 1100 LUMENS.

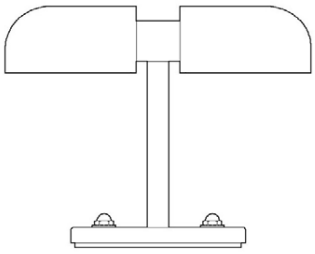

NOTES:

- Refer to RW2 drawing LT-123 for details
- The quantities do not include overages & spares.
- Fabricator to provide shop drawings and finish samples for approval by RW2 prior to production.
- Fabricator to verify all dimensions prior to production.
- Supplied items must be contract quality and suitable for commercial use.
- Fixture must meet all applicable codes.
- Fixture must be UL approved.
- Fabricator to submit protoype for RW2 approval prior to bulk fabrication

ROMAN AND WILLIAMS BUILDINGS AND INTERIORS
324 LAFAYETTE STREET 6TH FLR - NEW YORK, NY 10012 PH: 1. 212.625.3808 - FAX: 1. 212.625.3807 WWW.ROMANANDWILLIAMS.COM

RW STUDIO

FF&E SPECIFICATIONS
LIGHTING

PROJECT:	MANHATTAN WEST		
ITEM:	SCONCE	ITEM NO:	LT-125
LOCATION:	GYM STAIRWELL	DATE:	7.30.2014
REF. FLOOR PLAN:	*REFER TO LIGHTING	REVISED:	
REF. DRAWING NO:	CONSULTANTS DRAWINGS		

ITEM:

NAME / STYLE#: WF-8 ROUND OPEN LIGHT W/SCREWS
FINISH: CUSTOM TBD
GLASS: FROSTED

DIMENSIONS: 8.5" DIA. X 4.4"D

MATERIAL: METAL/GLASS

QUANTITY: 10

SOURCE: SHIPLIGHTS.COM
EMAIL: INFO@SHIPLIGHTS.COM
PHONE: 781.823.5555

PRICE: $350 RETAIL

LAMP:

BULB: RECOMMENDED: SYLVANIA DULUX EL MINI TWIST BULB
MAX WATTAGE: 75 WATT
QTY PER FIXTURE: 1

LAMPING: (1) 18W MAXIMUM 2,700K LED A19 REPLACEMENT LAMP - MINIMUM 1100 LUMENS.

NOTES:

- Refer to image for DIRECT purchase
- The quantities do not include overages & spares.
- Supplied items must be contract quality and suitable for commercial use.
- Fixture must meet all applicable codes.
- Fixture must be UL approved.

ROMAN AND WILLIAMS BUILDINGS AND INTERIORS
324 LAFAYETTE STREET 6TH FLR - NEW YORK, NY 10012 PH: 1. 212.625.3808 - FAX: 1. 212.625.3807 WWW.ROMANANDWILLIAMS.COM

RW STUDIO

FF&E SPECIFICATIONS
LIGHTING

PROJECT:	MANHATTAN WEST		
ITEM:	SCONCE	ITEM NO:	LT-126
LOCATION:	TREATMENT ROOM	DATE:	7.30.2014
REF. FLOOR PLAN:	*REFER TO LIGHTING	REVISED:	7.10.2014
REF. DRAWING NO:	CONSULTANTS DRAWINGS		

ITEM:

NAME / STYLE#: BROADWAY 1 LIGHT WALL SCONCE
SKU # FR41430PAL

DIMENSIONS: 8"T X 5.3"W X 9" D

MATERIAL: ALUMINUM, ETCHED GLASS

QUANTITY: 4

SOURCE: FREDRICK RAYMOND
EMAIL; customerservice@lightingnewyork.com
PHONE: 866-344-3875

PRICE: $199 RETAIL

LAMP:

WATTAGE: 60W
BULB: G-9

LAMPING: (1) 60W G9 HALOGEN LAMP

NOTES:

- Refer to image for DIRECT purchase
- The quantities do not include overages & spares.
- Supplied items must be contract quality and suitable for commercial use.
- Fixture must meet all applicable codes.
- Fixture must be UL approved.

ROMAN AND WILLIAMS BUILDINGS AND INTERIORS
324 LAFAYETTE STREET 6TH FLR - NEW YORK, NY 10012 PH: 1. 212.625.3808 - FAX: 1. 212.625.3807 WWW.ROMANANDWILLIAMS.COM

RW STUDIO

FF&E SPECIFICATIONS
LIGHTING

PROJECT:	MANHATTAN WEST		
ITEM:	SCONCE	ITEM NO:	LT-127
LOCATION:	BASKETBALL COURT	DATE:	7.30.2014
REF. FLOOR PLAN:	*REFER TO LIGHTING	REVISED:	7.10.2014
REF. DRAWING NO:	CONSULTANTS DRAWINGS		

ITEM:

NAME / STYLE#: WF-4 ROUND CAGE LIGHT W/SCREWS
FINISH: CUSTOM TBD
GLASS: FROSTED

DIMENSIONS: 8.5" DIA. X 4.4"D

MATERIAL: METAL/GLASS

QUANTITY: 4

SOURCE: SHIPLIGHTS.COM
EMAIL: INFO@SHIPLIGHTS.COM
PHONE: 781.823.5555

PRICE: $350 RETAIL

LAMP:

BULB: INCANDESCANT, CL, LED
RECOMMENDED: SYLVANIA
DULUX EL MINI TWIST BULB

MAX WATTAGE: 75 WATT
QTY PER FIXTURE: 1

LAMPING: (1) 18W MAXIMUM 2,700K LED A19 REPLACEMENT LAMP - MINIMUM 1100 LUMENS.

NOTES:

- Refer to image for DIRECT purchase
- The quantities do not include overages & spares.
- Supplied items must be contract quality and suitable for commercial use.
- Fixture must meet all applicable codes.
- Fixture must be UL approved.

ROMAN AND WILLIAMS BUILDINGS AND INTERIORS
324 LAFAYETTE STREET 6TH FLR - NEW YORK, NY 10012 PH: 1. 212.625.3808 - FAX: 1. 212.625.3807 WWW.ROMANANDWILLIAMS.COM

RW STUDIO

FF&E SPECIFICATIONS
LIGHTING

PROJECT:	MANHATTAN WEST		
ITEM:	PENDANT	ITEM NO:	LT-129
LOCATION:	PAVILLION	DATE:	7.30.2014
REF. FLOOR PLAN:	*REFER TO LIGHTING	REVISED:	
REF. DRAWING NO:	CONSULTANTS DRAWINGS		

ITEM:

NAME / STYLE#: METAL RING PENDANT
PRODUCT #: 999-902-070709b

DIMENSIONS: 18"w x 31" h

MATERIAL: BRUSHED STEEL
FINISH: BRUSHED STEEL

QUANTITY: 6

SOURCE: CONANT METAL AND LIGHT
EMAIL: INFO@CONANTMETALANDLIGHT.COM
1.800.832.4482

PRICE: $365 Retail

LAMP:

BULB: STANDARD INCANDESCANT
MAX WATTAGE: 100 WATTS
QTY PER FIXTURE: 1
SOCKET: MEDIUM BASE

LAMPING: (1) 18W MAXIMUM 2,700K LED A19 REPLACEMENT LAMP - MINIMUM 1100 LUMENS.

NOTES:

- Refer to image for DIRECT purchase
- The quantities do not include overages & spares.
- Supplied items must be contract quality and suitable for commercial use.
- Fixture must meet all applicable codes.
- Fixture must be UL approved.

ROMAN AND WILLIAMS BUILDINGS AND INTERIORS
324 LAFAYETTE STREET 6TH FLR - NEW YORK, NY 10012 PH: 1. 212.625.3808 - FAX: 1. 212.625.3807 WWW.ROMANANDWILLIAMS.COM

RW STUDIO

FF&E SPECIFICATIONS
LIGHTING

PROJECT:	MANHATTAN WEST		
ITEM:	TABLE LAMP	ITEM NO:	LT-131
LOCATION:	PAVILLION	DATE:	7.30.2014
REF. FLOOR PLAN:	*REFER TO LIGHTING	REVISED:	
REF. DRAWING NO:	CONSULTANTS DRAWINGS		

ITEM:

NAME / STYLE#: ALUMINUM TRUMPET PENDANT
PRODUCT #: 001-802-0019

DIMENSIONS: 10" DIA SHADE. LENGTH FROM 37" to 40"

MATERIAL: SPUN BRASS & ALUMINUM

QUANTITY: 12

SOURCE: CONANT METAL AND LIGHT
EMAIL: INFO@CONANTMETALANDLIGHT.COM
PHONE: 1.800.832.4482

PRICE: $235 Retail

LAMP:

BULB: STANDARD INCANDESCANT
MAX WATTAGE: 100 WATTS
QTY PER FIXTURE: 1
SOCKET: MEDIUM BASE

LAMPING: (1) 18W MAXIMUM 2,700K LED A19 REPLACEMENT LAMP - MINIMUM 1100 LUMENS.

NOTES:
- Refer to image for DIRECT purchase
- The quantities do not include overages & spares.
- Supplied items must be contract quality and suitable for commercial use.
- Fixture must meet all applicable codes.
- Fixture must be UL approved.

ROMAN AND WILLIAMS BUILDINGS AND INTERIORS
324 LAFAYETTE STREET 6TH FLR - NEW YORK, NY 10012 PH: 1. 212.625.3808 - FAX: 1. 212.625.3807 WWW.ROMANANDWILLIAMS.COM

RW STUDIO

FF&E SPECIFICATIONS
LIGHTING

PROJECT:	MANHATTAN WEST		
ITEM:	PENDANT	ITEM NO:	LT-132
LOCATION:	KITCHEN	DATE:	7.30.2014
REF. FLOOR PLAN:	*REFER TO LIGHTING	REVISED:	7.10.2014
REF. DRAWING NO:	CONSULTANTS DRAWINGS		

ITEM:

NAME / STYLE#: GRAND ARCH

DIMENSIONS: 20" DIA. X 15" H +9FT CORD

MATERIAL: BLACKENED BRASS DOME

QUANTITY: 3

LAMP:

BULB: INCANDESCANT
MAX WATTAGE: 100W
QTY PER FIXTURE: 1
SOCKET: MEDUIM BASE

LAMPING: (1) 18W MAXIMUM 2,700K LED A19 REPLACEMENT LAMP - MINIMUM 1100 LUMENS.

SOURCE: ALLIED MAKER
CONTACT: RYDEN
EMAIL: Allied Maker <studio@alliedmaker.com>
PHONE: (516) 399-3830

PRICE: $2500.00 RETAIL

*INTENDED FINISH NOT SHOWN

NOTES:

- Refer to image for DIRECT purchase
- The quantities do not include overages & spares.
- Supplied items must be contract quality and suitable for commercial use.
- Fixture must meet all applicable codes.
- Fixture must be UL approved.

ROMAN AND WILLIAMS BUILDINGS AND INTERIORS
324 LAFAYETTE STREET 6TH FLR - NEW YORK, NY 10012 PH: 1. 212.625.3808 - FAX: 1. 212.625.3807 WWW.ROMANANDWILLIAMS.COM

RW STUDIO

FF&E SPECIFICATIONS
LIGHTING

PROJECT:	MANHATTAN WEST		
ITEM:	PENDANT	ITEM NO:	LT-133
LOCATION:	CHEFS TABLE	DATE:	7.30.2014
REF. FLOOR PLAN:	*REFER TO LIGHTING	REVISED:	7.10.2014
REF. DRAWING NO:	CONSULTANTS DRAWINGS		

ITEM:

NAME / STYLE#: LUNA CLEAR WITH NATURAL BRASS ROD

DIMENSIONS: 10"Dia. Shade x 21-27"H

MATERIAL: BRASS, OPAL GLASS

QUANTITY: 3

LAMP:

BULB: A19 INCANDESCANT OR EDISON
MAX WATTAGE: 60 WATTS
QTY PER FIXTURE: 1
SOCKET: E26

LAMPING: (1) 18W MAXIMUM 2,700K LED A19 REPLACEMENT LAMP - MINIMUM 1100 LUMENS.

SOURCE: SCHOOLHOUSE ELECTRIC
PHONE: P: 212-226-6113
WEBSITE: www.schoolhouseelectric.com/

PRICE: $189 RETAIL

NOTE: SUBSTITUTE OPAL GLASS SHADE FOR CLEAR GLASS SHADE- 10" DIA, #OP-2410-10-4

PRICE: $55 RETAIL

*IMAGE DOES NOT REFLECT INTENDED SHADE FINISH

NOTES:

- Refer to image for DIRECT purchase
- The quantities do not include overages & spares.
- Supplied items must be contract quality and suitable for commercial use.
- Fixture must meet all applicable codes.
- Fixture must be UL approved.

ROMAN AND WILLIAMS BUILDINGS AND INTERIORS
324 LAFAYETTE STREET 6TH FLR - NEW YORK, NY 10012 PH: 1. 212.625.3808 - FAX: 1. 212.625.3807 WWW.ROMANANDWILLIAMS.COM

THE FOLLOWING PLUG-IN FIXTURES WILL BE PURCHASED AS PART OF THE FF&E PACKAGE BY OWNERSHIP:

LT-135 - LOBBY - DECORATIVE FLOOR LAMP - ALLOW 40 WATTS
LT-136 - LOBBY - DECORATIVE TABLE LAMP - ALLOW 40 WATTS
LT-137 - THEATRE - DECORATIVE TABLE LAMP - ALLOW 40 WATTS
LT-138 - LIBRARY - DECORATIVE TABLE LAMP - ALLOW 40 WATTS
LT-139 - LIBRARY - DECORATIVE FLOOR LAMP - ALLOW 40 WATTS
LT-140 - GOLF LOUNGE - DECORATIVE TABLE LAMP - ALLOW 40 WATTS
LT-141 - LOUNGE - DECORATIVE TABLE LAMP - ALLOW 40 WATTS
LT-142 - LOUNGE - DECORATIVE TABLE LAMP - ALLOW 40 WATTS
LT-143 - PAVILLION - DECORATIVE TABLE LAMP - ALLOW 40 WATTS
LT-144 - GAME ROOM - DECORATIVE TABLE LAMP - ALLOW 40 WATTS
LT-145 - LOUNGE - DECORATIVE TABLE LAMP - ALLOW 40 WATTS

REFER TO DESIGN ARCHITECT'S FF&E SPECIFICATION FOR ADDITIONAL INFORMATION.

SPECIFICATION SHEET PAGE 1/2

T3450W

3 1/2" Series

Project
Notes
Fixture Type
Date

Low Profile Adjustable Wall Wash Trim

T3450W-11
(illustrated)

SPECIFICATIONS

TRIM	Powder coat painted or plated die-formed steel. Different finishes available. Painted finishes available with Marine Grade option.
LAMPS	**MR16** 20-50W **GU/GZ-10** 50W This product was designed for MR16 halogen lamps or GU/GZ-10. If you want to use the dimming option and you replace the MR16 or GU/GZ-10 lamp by an equivalent LED lamp, please see dimmer compatibility list on our Website.
REFLECTOR	**Standard: Anodized Aluminum** Available:

Anodized	**Specular**	**Painted**
Azure **(AZ)**	Black **(BK)**	White **(-01)**
Burnt Orange **(BO)**	Champagne **(CH)**	Black **(-02)**
Cobalt Blue **(CB)**	Clear **(CL)**	Matte White **(-11)**
Inca Gold **(IG)**		
Ruby **(RU)**		

CEILING CUTOUT	**Ø 3 5/8" (92 mm)**

COMPATIBLE HOUSINGS	**Remodel Housing**	**New Construction Housing**	**Insulated Housing**
	50W MR16 GU 5.3 IT3000LE IT3000LM	**50W MR16 GU 5.3** NW3000CE NW3000CM NW3000LE NW3000LM **50W GU/GZ-10** NW3000LT	**20W MR16 GU 5.3** ISMR3000E20 ISMR3000M20 **35W MR16 GU 5.3** ISMR3000E35 ISMR3000M35 **50W MR16 GU 5.3** ISMR3000M **50W GU/GZ-10** ISMR3000T

CERTIFICATION	cULus **E174023** for **damp locations**
WARRANTY	1 year for standard finishes, 2-year on "Marine Grade" finish.

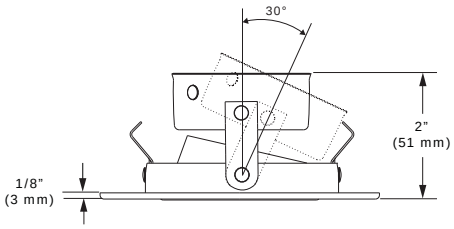

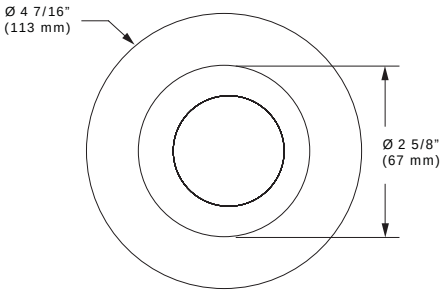

c UL us LISTED

MADE IN CANADA

CONTRAST LIGHTING

CONTRAST LIGHTING M. L. INC.
1009 RUE DU PARC-INDUSTRIEL
ST-JEAN-CHRYSOSTOME QC G6Z 1C5
CANADA

Tel: 1-888-839-4624
Fax: 1-877-839-7057
info@contrastlighting.com
www.contrastlighting.com

2014-04

SPECIFICATION SHEET PAGE 2/2

T3450W

3 1/2" Series

LIGHTING SUPPLIER TO FURNISH:
(1) HEXCELL LOUVER
(1) SPREAD LENS (SPREAD TBD)
(1) ROSCO DICHROIC COLOR FILTER
(COLOR TBD) - REFER TO "DICHRO" CUT

CODIFICATION EXAMPLE

T3450W-11BKMG

MODEL: T3450W
FINISH: 11
REFLECTOR: BK
MARINE GRADE OPTION: MG

LAMPING: (1) 12W MAXIMUM 2,700K LED MR16 REPLACEMENT LAMP - SPOT BEAM SPREAD - MINIMUM 400 LUMENS AND 5600 CBCP.

EXACT SPECIFICATION TO BE CONFIRMED AT TIME OF PURCHASE BASED ON CURRENT TECHNOLOGY AND MARKET AVAILABILITY.

LIGHTING SUPPLIER WILL NEED TO FURNISH SAMPLE OF FIXTURE WITH LAMP FOR REVIEW OF DIMMING AND COLOR TEMPERATURE BY OWNER, ARCHITECT, AND LIGHTING DESIGNER PRIOR TO FINALIZING SPECIFICATION.

ORDERING CODE

MODEL	TRIM FINISH		REFLECTOR		MARINE GRADE
T3450W					
T3450W	**-01**	White	**ANODIZED**		**MG** (optional)
	-02	Black	**...**	Aluminum (standard)	May be applied on finishes:
	-03	Gold Plated 24K	**AZ**	Azur	-01, -02, -05, -06, -11
	-04	Chrome	**BO**	Burnt Orange	and -15.
	-04BR	Brushed Chrome	**IG**	Inca Gold	
	-05	Architectural Bronze	**RU**	Ruby	
	-06	Antique Copper	**CB**	Cobalt Blue	
	-08	Antique Sliver			
	-11	Matte White	**SPECULAR**		
	-12BR	Brushed Nickel	**CL**	Clear	
	-13	Satin Nickel	**BK**	Black	
	-14	Almond	**CH**	Champagne	
	-15	Metallic Grey			
	-16	Satin Chrome	**PAINTED**		
			-01	White	
			-02	Black	
			-11	Matte White	

MARINE GRADE - Unless otherwise indicated, trims are for interior, cold and exterior locations where fixtures are not subject to direct rain or snow exposure as in soffits. MARINE GRADE treatment is recommended for exterior, shower and high salinity environment.

c UL us LISTED

MADE IN CANADA

CONTRAST LIGHTING

CONTRAST LIGHTING M. L. INC.
1009 RUE DU PARC-INDUSTRIEL
ST-JEAN-CHRYSOSTOME QC G6Z 1C5
CANADA

Tel: 1-888-839-4624
Fax: 1-877-839-7057
info@contrastlighting.com
www.contrastlighting.com

2014-04

SPECIFICATION SHEET

3 1/2" 3000 SERIES

NW3000CM

NW3000CM2
NW3000CM3

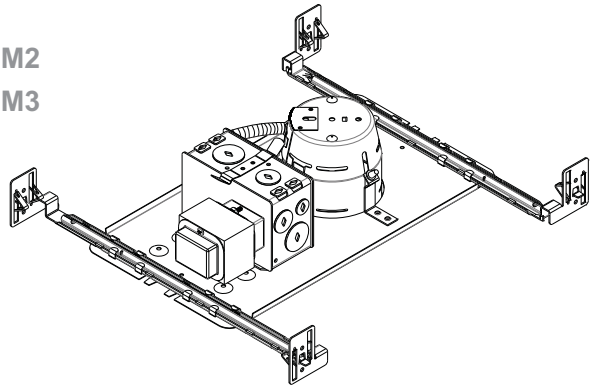

SHORT NEW CONSTRUCTION HOUSING WITH MAGNETIC TRANSFORMER

Damp Location	YES
MR16	MR16 50W MAX
Voltage	NW3000CM : 120 Volts (CAN & USA) NW3000CM2 : 277 Volts (USA) NW3000CM3 : 347 Volts (CANADA)
	Magnetic Transformer: EC50M 50 VA 120V / 12V EC50M2 50 VA 277V / 12V EC50M3 50 VA 347V / 12V
	Thermal Protector: T°C 130°C No 033
OD Cut	3 5/8" (92 mm)
LISTED	E174023
Dimensions	Overall Dimensions: Length: 13 1/2" (343 mm) | With bars: 15 3/8" (391 mm) Width: 7 3/8" (187 mm) | With bars: min 10" (254 mm) Height: 3 7/16" (94 mm)

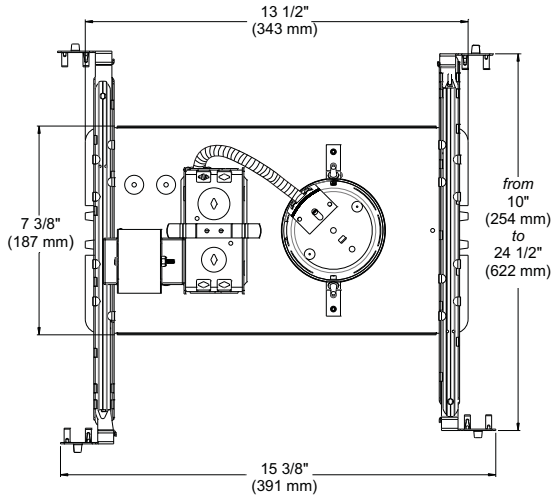

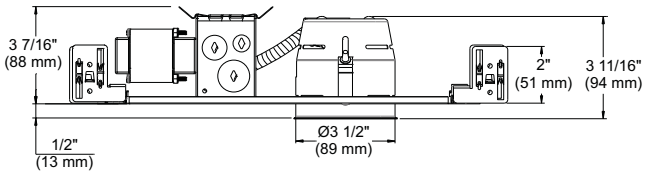

COMPATIBLE TRIMS

37W MR16			50W MR16		
R3152	S3151	T3145DG	R3151	T3145D ST	T3450D SM
R3171	S3400	T3152	R3151K	T3145W	T3450D ST
R3450D	S3400D	T3250DG	R3151W	T3165	T3450K
R3470	S3450	T3602	R3151WK	T3185	T3450W
R3470D	S3450D	T3652	R3601	T3200	T3450WK
R3602	S3500	T3671	R3601W	T3250	T3500
R3652	S3500D	T3700	R3651	T3260	T3500D SM
S3145	S3601	T3800	R3651W	T3300	T3500D ST
S3145D	S3651	T3850	T3000	T3400	T3500W
		T3900	T3100	T3400D SM	T3600
			T3125	T3400D ST	T3650
			T3145	T3400W	
			T3145D SM	T3450	

TECHNICAL SPECIFICATIONS

0.051"(1.3 mm) thickness galvanized steel
Below-ceiling accessible
Hooks: #CAN 2,088,648 and #USA 5,377,088 5,377,088
Installs on ceiling up to 7/8" thick
Perfect fit into ceiling
No light leakage

MADE IN CANADA

LISTED
Certified UL Standards

Your representative :_____

Your project :_____

CONTRAST LIGHTING INC.
1009, rue du Parc Industriel, Saint-Jean-Chrysostome QC G6Z 1C5, CANADA Tel: 1-888-839-4624 Fax: 1-877-839-7057
info@contrastlighting.com
www.contrastlighting.com

2012-11

LIGHTING SUPPLIER TO FURNISH:
(1) SPREAD LENS (SPREAD TBD)
(1) ROSCO DICHROIC COLOR FILTER
(COLOR TBD) - REFER TO "DICHRO" CUT

SPECIFICATION SHEET

3 1/2" 3000 SERIES

S3450D

LAMPING: (1) 12W MAXIMUM 2,700K LED MR16 REPLACEMENT LAMP - SPOT BEAM SPREAD - MINIMUM 400 LUMENS AND 5600 CBCP.

EXACT SPECIFICATION TO BE CONFIRMED AT TIME OF PURCHASE BASED ON CURRENT TECHNOLOGY AND MARKET AVAILABILITY.

LIGHTING SUPPLIER WILL NEED TO FURNISH SAMPLE OF FIXTURE WITH LAMP FOR REVIEW OF DIMMING AND COLOR TEMPERATURE BY OWNER, ARCHITECT, AND LIGHTING DESIGNER PRIOR TO FINALIZING SPECIFICATION.

LOW PROFILE ADJUSTABLE SHOWER TRIM WITH FROSTED LENS

Wet Location	**YES**
MR16	**20-50W**
GU/GZ-10	**YES***
Reflector	DOES NOT APPLY
	Insulated ceiling housing ISMR3000E20, ISMR3000M20, ISMR3000M, ISMR3000E35, ISMR3000M35
	New construction housing NW3000CE, NW3000CM, NW3000LE, NW3000LM NW3000LT*
	Remodel housing IT3000LE, IT3000LM
FC C F Lenses	**Standard : Frosted lens** Available : Clear lens (**C**), Frosted with clear center lens (**FC**). To order, place the lens code after the trim code. Ex. : S3450D**FC**-01

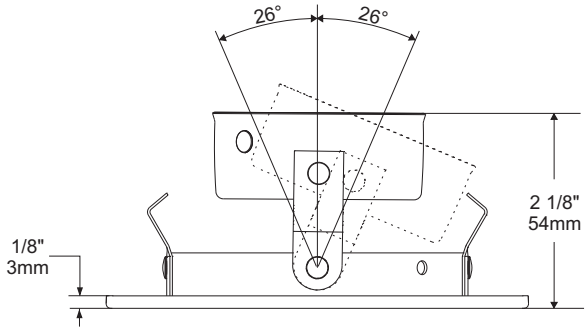

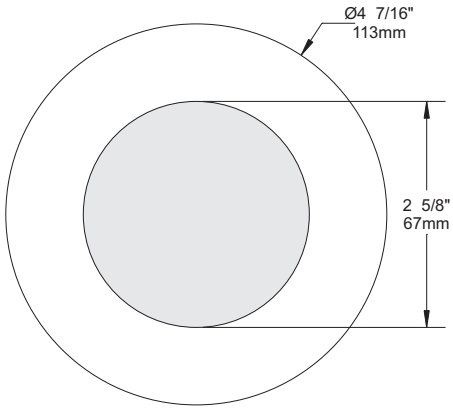

COMPATIBLE HOUSINGS

50W GU-GZ/10	50W MR16	37W MR16	35W MR16	20W MR16
NW3000LT*	IT3000LE IT3000LM NW3000LE NW3000LM	NW3000CE NW3000CM	ISMR3000M	ISMR3000E20 ISMR3000M20

TRIM FINISHES

-01 WHITE	**-04BR** BRUSHED CHROME	**-08** ANTIQUE SILVER
-02 BLACK	**-05** ARCHITECTURAL BRONZE	**-11** MATTE WHITE
-03 24K GOLD	**-06** ANTIQUE COPPER	**-12BR** BRUSHED NICKEL
-04 CHROME	**-07** ANTIQUE BRASS	**-13** SATIN NICKEL
		-14 ALMOND

Unless otherwise indicated, trims are for **interior use only**. For exterior use and up to wet conditions, **MARINE GRADE** treatment is **recommended.** Available for finishes -01, -02, -05, -06, -11 and -14 only.

c UL us LISTED
Certified UL Standards

Project _____

Representative _____

CONTRAST LIGHTING
1009, rue du Parc Industriel, Saint-Jean-Chrysostome, Qc, CAN G6Z 1C5 Tel.: 1-888-839-4624 Fax : 1-877-839-7057
info@contrastlighting.com
www.contrastlighting.com

MARCH 2010

SPECIFICATION SHEET

3 1/2" 3000 SERIES

NW3000CM

NW3000CM2
NW3000CM3

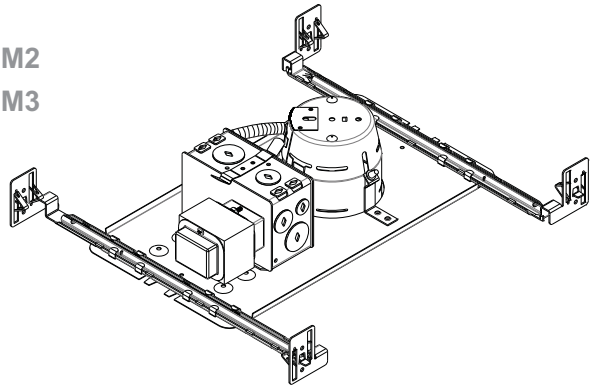

SHORT NEW CONSTRUCTION HOUSING WITH MAGNETIC TRANSFORMER

Damp Location	YES
MR16	MR16 50W MAX
Voltage	NW3000CM : 120 Volts (CAN & USA) NW3000CM2 : 277 Volts (USA) NW3000CM3 : 347 Volts (CANADA)
	Magnetic Transformer: EC50M 50 VA 120V / 12V EC50M2 50 VA 277V / 12V EC50M3 50 VA 347V / 12V
	Thermal Protector: T°C 130°C No 033
OD Cut	3 5/8" (92 mm)
c UL us LISTED	E174023
Dimensions	Overall Dimensions: Length: 13 1/2" (343 mm) | With bars: 15 3/8" (391 mm) Width: 7 3/8" (187 mm) | With bars: min 10" (254 mm) Height: 3 7/16" (94 mm)

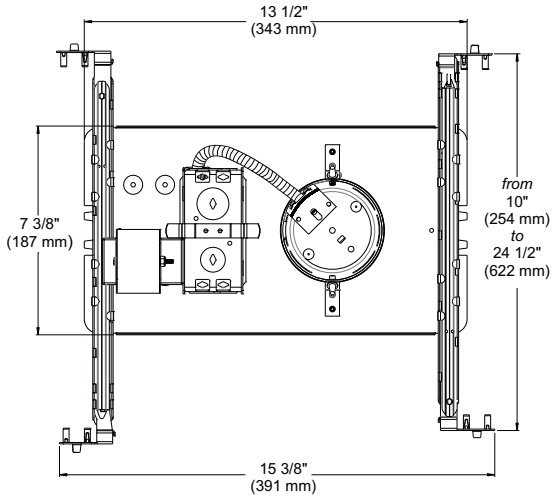

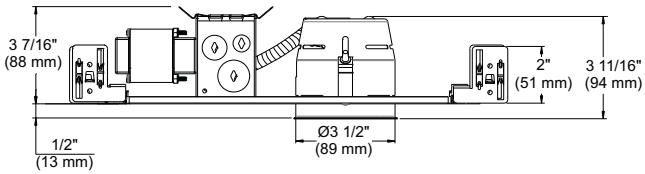

COMPATIBLE TRIMS

37W MR16			50W MR16		
R3152	S3151	T3145DG	R3151	T3145D ST	T3450D SM
R3171	S3400	T3152	R3151K	T3145W	T3450D ST
R3450D	S3400D	T3250DG	R3151W	T3165	T3450K
R3470	S3450	T3602	R3151WK	T3185	T3450W
R3470D	S3450D	T3652	R3601	T3200	T3450WK
R3602	S3500	T3671	R3601W	T3250	T3500
R3652	S3500D	T3700	R3651	T3260	T3500D SM
S3145	S3601	T3800	R3651W	T3300	T3500D ST
S3145D	S3651	T3850	T3000	T3400	T3500W
		T3900	T3100	T3400D SM	T3600
			T3125	T3400D ST	T3650
			T3145	T3400W	
			T3145D SM	T3450	

TECHNICAL SPECIFICATIONS

0.051"(1.3 mm) thickness galvanized steel
Below-ceiling accessible
Hooks: #CAN 2,088,648 and #USA 5,377,088 5,377,088
Installs on ceiling up to 7/8" thick
Perfect fit into ceiling
No light leakage

MADE IN CANADA

c UL us LISTED
Certified UL Standards

Your representative :_____

Your project :_____

CONTRAST LIGHTING INC.
1009, rue du Parc Industriel, Saint-Jean-Chrysostome QC G6Z 1C5, CANADA Tel: 1-888-839-4624 Fax: 1-877-839-7057
info@contrastlighting.com
www.contrastlighting.com

2012-11

SPECIFICATION SHEET PAGE 1/2

T3450

3 1/2" Series

Project
Notes
Fixture Type
Date

Low Profile Regressed Trim

T3450-12BR
(illustrated)

SPECIFICATIONS

TRIM	Powder coat painted or plated die-formed steel. Different finishes available. Painted finishes available with Marine Grade option.
LAMPS	**MR16** 20-50W **GU/GZ-10** 50W **GX10** 20W HID (High Intensity Discharge) This product was designed for MR16 halogen lamps or GU/GZ-10. If you want to use the dimming option and you replace the MR16 or GU/GZ-10 lamp by an equivalent LED lamp, please see dimmer compatibility list on our Website.
REFLECTOR	**Standard: Anodized Aluminum** Available: **Anodized**: Azure **(AZ)**, Burnt Orange **(BO)**, Cobalt Blue **(CB)**, Inca Gold **(IG)**, Ruby **(RU)** **Specular**: Black **(BK)**, Champagne **(CH)**, Clear **(CL)** **Painted**: White **(-01)**, Black **(-02)**, Matte White **(-11)**
CEILING CUTOUT	**Ø 3 5/8" (92 mm)**
COMPATIBLE HOUSINGS	**Remodel Housing**: **50W MR16 GU 5.3** IT3000E IT3000M IT3000LE IT3000LM **50W GU/GZ-10** IT3000LT **20W GX10 (HID)** MH3000GX120 **New Construction Housing**: **50W MR16 GU 5.3** NW3000CE NW3000CM NW3000LE NW3000LM NWD3000LE NWT3000LE **50W GU/GZ-10** NW3000LT **Insulated Housing**: **20W MR16 GU 5.3** ISMR3000E20 ISMR3000M20 **35W MR16 GU 5.3** ISMR3000E35 ISMR3000M35 **50W MR16 GU 5.3** ISMR3000M **50W GU/GZ-10** ISMR3000T
CERTIFICATION	cULus **E174023** for **damp locations**
WARRANTY	1 year for standard finishes, 2-year on "Marine Grade" finish

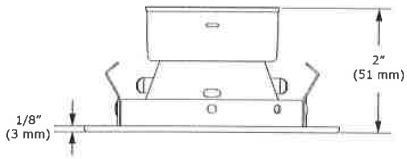

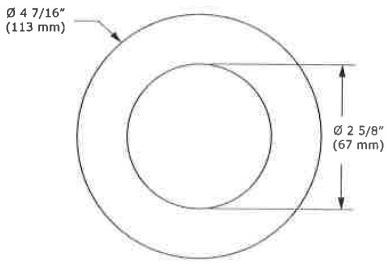

c UL us LISTED

MADE IN CANADA

CONTRAST LIGHTING

CONTRAST LIGHTING M. L. INC.
1009 RUE DU PARC-INDUSTRIEL
ST-JEAN-CHRYSOSTOME QC G6Z 1C5
CANADA

Tel: 1-888-839-4624
Fax: 1-877-839-7057
info@contrastlighting.com
www.contrastlighting.com

2014-04

SPECIFICATION SHEET PAGE 2/2

T3450

3 1/2" Series

LIGHTING SUPPLIER TO FURNISH:
(1) HEXCELL LOUVER
(1) SPREAD LENS (SPREAD TBD)
(1) ROSCO DICHROIC COLOR FILTER
(COLOR TBD) - REFER TO "DICHRO" CUT

LAMPING: (1) 12W MAXIMUM 2,700K LED MR16 REPLACEMENT LAMP - SPOT BEAM SPREAD - MINIMUM 400 LUMENS AND 5600 CBCP.

EXACT SPECIFICATION TO BE CONFIRMED AT TIME OF PURCHASE BASED ON CURRENT TECHNOLOGY AND MARKET AVAILABILITY.

LIGHTING SUPPLIER WILL NEED TO FURNISH SAMPLE OF FIXTURE WITH LAMP FOR REVIEW OF DIMMING AND COLOR TEMPERATURE BY OWNER, ARCHITECT, AND LIGHTING DESIGNER PRIOR TO FINALIZING SPECIFICATION.

CODIFICATION EXAMPLE

T3450-11BKMG

MODEL — FINISH — REFLECTOR — MARINE GRADE OPTION

ORDERING CODE

MODEL	TRIM FINISH		REFLECTOR		MARINE GRADE
T3450					
T3450	**-01**	White	**ANODIZED**		**MG** (optional)
	-02	Black	**...**	Aluminum (standard)	May be applied on finishes:
	-03	Gold Plated 24K	**AZ**	Azur	-01, -02, -05, -06, -11
	-04	Chrome	**BO**	Burnt Orange	and -15.
	-04BR	Brushed Chrome	**IG**	Inca Gold	
	-05	Architectural Bronze	**RU**	Ruby	
	-06	Antique Copper	**CB**	Cobalt Blue	
	-08	Antique Sliver			
	-11	Matte White	**SPECULAR**		
	-12BR	Brushed Nickel	**CL**	Clear	
	-13	Satin Nickel	**BK**	Black	
	-14	Almond	**CH**	Champagne	
	-15	Metallic Grey			
	-16	Satin Chrome	**PAINTED**		
			-01	White	
			-02	Black	
			-11	Matte White	

MARINE GRADE - Unless otherwise indicated, trims are for interior, cold and exterior locations where fixtures are not subject to direct rain or snow exposure as in soffits. MARINE GRADE treatment is recommended for exterior, shower and high salinity environment.

c UL us LISTED

MADE IN CANADA

CONTRAST LIGHTING

CONTRAST LIGHTING M. L. INC.
1009 RUE DU PARC-INDUSTRIEL
ST-JEAN-CHRYSOSTOME QC G6Z 1C5
CANADA

Tel: 1-888-839-4624
Fax: 1-877-839-7057
info@contrastlighting.com
www.contrastlighting.com

2014-04

SPECIFICATION SHEET

3 1/2" 3000 SERIES

NW3000CM

NW3000CM2
NW3000CM3

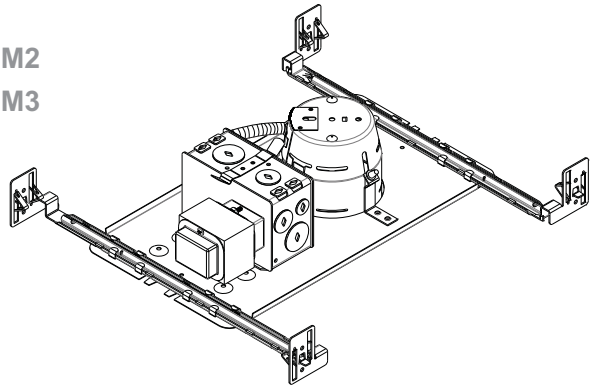

SHORT NEW CONSTRUCTION HOUSING WITH MAGNETIC TRANSFORMER

Damp Location	YES
MR16	MR16 50W MAX
Voltage	NW3000CM : 120 Volts (CAN & USA) NW3000CM2 : 277 Volts (USA) NW3000CM3 : 347 Volts (CANADA)
	Magnetic Transformer: EC50M 50 VA 120V / 12V EC50M2 50 VA 277V / 12V EC50M3 50 VA 347V / 12V
	Thermal Protector: T°C 130°C No 033
OD Cut	3 5/8" (92 mm)
LISTED	E174023
Dimensions	Overall Dimensions: Length: 13 1/2" (343 mm) | With bars: 15 3/8" (391 mm) Width: 7 3/8" (187 mm) | With bars: min 10" (254 mm) Height: 3 7/16" (94 mm)

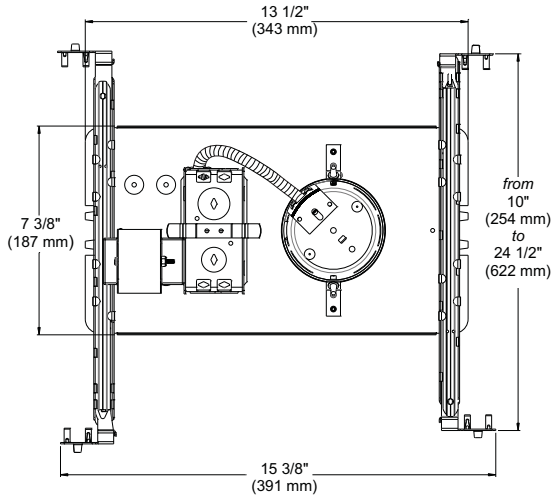

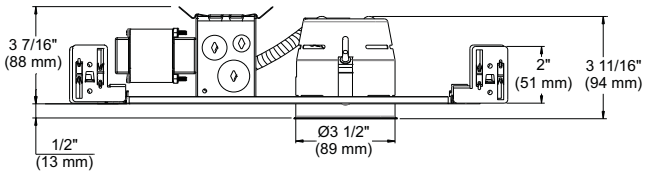

COMPATIBLE TRIMS

37W MR16			50W MR16		
R3152	S3151	T3145DG	R3151	T3145D ST	T3450D SM
R3171	S3400	T3152	R3151K	T3145W	T3450D ST
R3450D	S3400D	T3250DG	R3151W	T3165	T3450K
R3470	S3450	T3602	R3151WK	T3185	T3450W
R3470D	S3450D	T3652	R3601	T3200	T3450WK
R3602	S3500	T3671	R3601W	T3250	T3500
R3652	S3500D	T3700	R3651	T3260	T3500D SM
S3145	S3601	T3800	R3651W	T3300	T3500D ST
S3145D	S3651	T3850	T3000	T3400	T3500W
		T3900	T3100	T3400D SM	T3600
			T3125	T3400D ST	T3650
			T3145	T3400W	
			T3145D SM	T3450	

TECHNICAL SPECIFICATIONS

0.051"(1.3 mm) thickness galvanized steel
Below-ceiling accessible
Hooks: #CAN 2,088,648 and #USA 5,377,088 5,377,088
Installs on ceiling up to 7/8" thick
Perfect fit into ceiling
No light leakage

MADE IN CANADA

LISTED
Certified UL Standards

Your representative :_____

Your project :_____

CONTRAST LIGHTING
1009, rue du Parc Industriel, Saint-Jean-Chrysostome QC G6Z 1C5, CANADA Tel: 1-888-839-4624 Fax: 1-877-839-7057
info@contrastlighting.com
www.contrastlighting.com

2012-11

SPECIFICATION SHEET PAGE 1/2

T3450

3 1/2" Series

Project
Notes
Fixture Type
Date

Low Profile Regressed Trim

T3450-12BR
(illustrated)

SPECIFICATIONS

TRIM	Powder coat painted or plated die-formed steel. Different finishes available. Painted finishes available with Marine Grade option.
LAMPS	**MR16** 20-50W **GU/GZ-10** 50W **GX10** 20W HID (High Intensity Discharge) This product was designed for MR16 halogen lamps or GU/GZ-10. If you want to use the dimming option and you replace the MR16 or GU/GZ-10 lamp by an equivalent LED lamp, please see dimmer compatibility list on our Website.
REFLECTOR	**Standard: Anodized Aluminum** Available: **Anodized**: Azure **(AZ)**, Burnt Orange **(BO)**, Cobalt Blue **(CB)**, Inca Gold **(IG)**, Ruby **(RU)** **Specular**: Black **(BK)**, Champagne **(CH)**, Clear **(CL)** **Painted**: White **(-01)**, Black **(-02)**, Matte White **(-11)**
CEILING CUTOUT	**Ø 3 5/8" (92 mm)**
COMPATIBLE HOUSINGS	**Remodel Housing**: **50W MR16 GU 5.3** IT3000E IT3000M IT3000LE IT3000LM **50W GU/GZ-10** IT3000LT **20W GX10 (HID)** MH3000GX120 **New Construction Housing**: **50W MR16 GU 5.3** NW3000CE NW3000CM NW3000LE NW3000LM NWD3000LE NWT3000LE **50W GU/GZ-10** NW3000LT **Insulated Housing**: **20W MR16 GU 5.3** ISMR3000E20 ISMR3000M20 **35W MR16 GU 5.3** ISMR3000E35 ISMR3000M35 **50W MR16 GU 5.3** ISMR3000M **50W GU/GZ-10** ISMR3000T
CERTIFICATION	cULus **E174023** for **damp locations**
WARRANTY	1 year for standard finishes, 2-year on "Marine Grade" finish

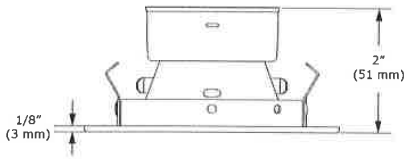

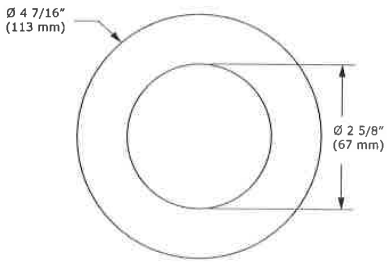

c UL us LISTED

MADE IN CANADA

CONTRAST LIGHTING

CONTRAST LIGHTING M. L. INC.
1009 RUE DU PARC-INDUSTRIEL
ST-JEAN-CHRYSOSTOME QC G6Z 1C5
CANADA

Tel: 1-888-839-4624
Fax: 1-877-839-7057
info@contrastlighting.com
www.contrastlighting.com

2014-04

SPECIFICATION SHEET PAGE 2/2

T3450

3 1/2" Series

LIGHTING SUPPLIER TO FURNISH:
(1) HEXCELL LOUVER
(1) SPREAD LENS (SPREAD TBD)
(1) ROSCO DICHROIC COLOR FILTER (COLOR TBD) - REFER TO "DICHRO" CUT

LAMPING: (1) 12W MAXIMUM 2,700K LED MR16 REPLACEMENT LAMP - SPOT BEAM SPREAD - MINIMUM 400 LUMENS AND 5600 CBCP.

EXACT SPECIFICATION TO BE CONFIRMED AT TIME OF PURCHASE BASED ON CURRENT TECHNOLOGY AND MARKET AVAILABILITY.

LIGHTING SUPPLIER WILL NEED TO FURNISH SAMPLE OF FIXTURE WITH LAMP FOR REVIEW OF DIMMING AND COLOR TEMPERATURE BY OWNER, ARCHITECT, AND LIGHTING DESIGNER PRIOR TO FINALIZING SPECIFICATION.

CODIFICATION EXAMPLE

T3450-11BKMG

MODEL — FINISH — REFLECTOR — MARINE GRADE OPTION

ORDERING CODE

MODEL	TRIM FINISH		REFLECTOR		MARINE GRADE
T3450					
T3450	**-01**	White	**ANODIZED**		**MG** (optional)
	-02	Black	**...**	Aluminum (standard)	May be applied on finishes:
	-03	Gold Plated 24K	**AZ**	Azur	-01, -02, -05, -06, -11
	-04	Chrome	**BO**	Burnt Orange	and -15.
	-04BR	Brushed Chrome	**IG**	Inca Gold	
	-05	Architectural Bronze	**RU**	Ruby	
	-06	Antique Copper	**CB**	Cobalt Blue	
	-08	Antique Sliver			
	-11	Matte White	**SPECULAR**		
	-12BR	Brushed Nickel	**CL**	Clear	
	-13	Satin Nickel	**BK**	Black	
	-14	Almond	**CH**	Champagne	
	-15	Metallic Grey			
	-16	Satin Chrome	**PAINTED**		
			-01	White	
			-02	Black	
			-11	Matte White	

MARINE GRADE - Unless otherwise indicated, trims are for interior, cold and exterior locations where fixtures are not subject to direct rain or snow exposure as in soffits. MARINE GRADE treatment is recommended for exterior, shower and high salinity environment.

c UL us LISTED

MADE IN CANADA

CONTRAST LIGHTING

CONTRAST LIGHTING M. L. INC.
1009 RUE DU PARC-INDUSTRIEL
ST-JEAN-CHRYSOSTOME QC G6Z 1C5
CANADA

Tel: 1-888-839-4624
Fax: 1-877-839-7057
info@contrastlighting.com
www.contrastlighting.com

2014-04

SPECIFICATION SHEET

3 1/2" 3000 SERIES

NW3000CM

NW3000CM2
NW3000CM3

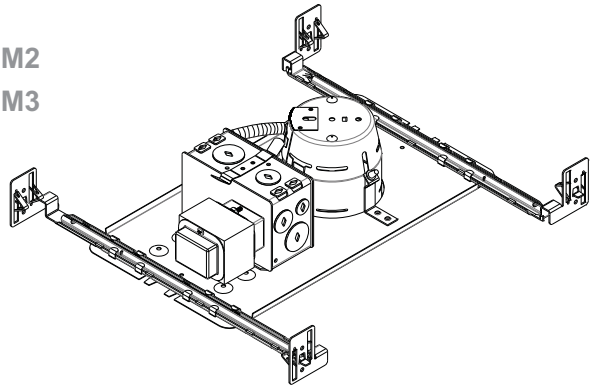

SHORT NEW CONSTRUCTION HOUSING WITH MAGNETIC TRANSFORMER

Damp Location	YES
MR16	MR16 50W MAX
Voltage	NW3000CM : 120 Volts (CAN & USA) NW3000CM2 : 277 Volts (USA) NW3000CM3 : 347 Volts (CANADA)
	Magnetic Transformer: EC50M 50 VA 120V / 12V EC50M2 50 VA 277V / 12V EC50M3 50 VA 347V / 12V
	Thermal Protector: T°C 130°C No 033
OD Cut	3 5/8" (92 mm)
LISTED	E174023
Dimensions	Overall Dimensions: Length: 13 1/2" (343 mm) | With bars: 15 3/8" (391 mm) Width: 7 3/8" (187 mm) | With bars: min 10" (254 mm) Height: 3 7/16" (94 mm)

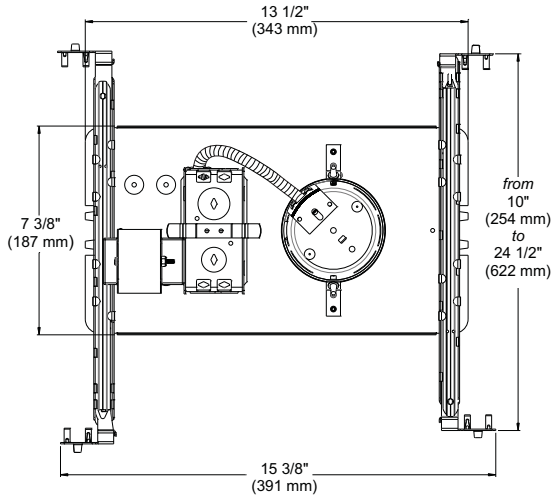

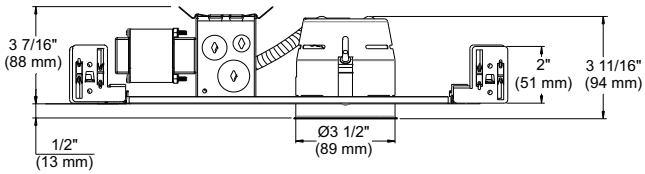

COMPATIBLE TRIMS

37W MR16			50W MR16		
R3152	S3151	T3145DG	R3151	T3145D ST	T3450D SM
R3171	S3400	T3152	R3151K	T3145W	T3450D ST
R3450D	S3400D	T3250DG	R3151W	T3165	T3450K
R3470	S3450	T3602	R3151WK	T3185	T3450W
R3470D	S3450D	T3652	R3601	T3200	T3450WK
R3602	S3500	T3671	R3601W	T3250	T3500
R3652	S3500D	T3700	R3651	T3260	T3500D SM
S3145	S3601	T3800	R3651W	T3300	T3500D ST
S3145D	S3651	T3850	T3000	T3400	T3500W
		T3900	T3100	T3400D SM	T3600
			T3125	T3400D ST	T3650
			T3145	T3400W	
			T3145D SM	T3450	

TECHNICAL SPECIFICATIONS

0.051"(1.3 mm) thickness galvanized steel
Below-ceiling accessible
Hooks: #CAN 2,088,648 and #USA 5,377,088 5,377,088
Installs on ceiling up to 7/8" thick
Perfect fit into ceiling
No light leakage

MADE IN CANADA

LISTED
Certified UL Standards

Your representative :_____

Your project :_____

CONTRAST LIGHTING
1009, rue du Parc Industriel, Saint-Jean-Chrysostome QC G6Z 1C5, CANADA Tel: 1-888-839-4624 Fax: 1-877-839-7057
info@contrastlighting.com
www.contrastlighting.com

2012-11

SPECIFICATION SHEET PAGE 1/2

T3450

3 1/2" Series

Project
Notes
Fixture Type
Date

Low Profile Regressed Trim

T3450-12BR
(illustrated)

SPECIFICATIONS

TRIM	Powder coat painted or plated die-formed steel. Different finishes available. Painted finishes available with Marine Grade option.
LAMPS	**MR16** 20-50W **GU/GZ-10** 50W **GX10** 20W HID (High Intensity Discharge) This product was designed for MR16 halogen lamps or GU/GZ-10. If you want to use the dimming option and you replace the MR16 or GU/GZ-10 lamp by an equivalent LED lamp, please see dimmer compatibility list on our Website.
REFLECTOR	**Standard: Anodized Aluminum** Available: **Anodized**: Azure **(AZ)**, Burnt Orange **(BO)**, Cobalt Blue **(CB)**, Inca Gold **(IG)**, Ruby **(RU)** **Specular**: Black **(BK)**, Champagne **(CH)**, Clear **(CL)** **Painted**: White **(-01)**, Black **(-02)**, Matte White **(-11)**
CEILING CUTOUT	**Ø 3 5/8" (92 mm)**
COMPATIBLE HOUSINGS	**Remodel Housing** **50W MR16 GU 5.3** IT3000E IT3000M IT3000LE IT3000LM **50W GU/GZ-10** IT3000LT **20W GX10 (HID)** MH3000GX120 **New Construction Housing** **50W MR16 GU 5.3** NW3000CE NW3000CM NW3000LE NW3000LM NWD3000LE NWT3000LE **50W GU/GZ-10** NW3000LT **Insulated Housing** **20W MR16 GU 5.3** ISMR3000E20 ISMR3000M20 **35W MR16 GU 5.3** ISMR3000E35 ISMR3000M35 **50W MR16 GU 5.3** ISMR3000M **50W GU/GZ-10** ISMR3000T
CERTIFICATION	cULus **E174023** for **damp locations**
WARRANTY	1 year for standard finishes, 2-year on "Marine Grade" finish

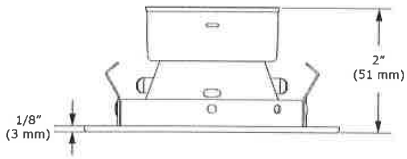

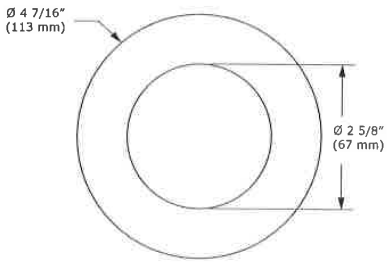

c UL us LISTED

MADE IN CANADA

CONTRAST LIGHTING

CONTRAST LIGHTING M. L. INC.
1009 RUE DU PARC-INDUSTRIEL
ST-JEAN-CHRYSOSTOME QC G6Z 1C5
CANADA

Tel: 1-888-839-4624
Fax: 1-877-839-7057
info@contrastlighting.com
www.contrastlighting.com

2014-04

SPECIFICATION SHEET PAGE 2/2

T3450

3 1/2" Series

LIGHTING SUPPLIER TO FURNISH:
(1) HEXCELL LOUVER
(1) SPREAD LENS (SPREAD TBD)
(1) ROSCO DICHROIC COLOR FILTER
(COLOR TBD) - REFER TO "DICHRO" CUT

CODIFICATION EXAMPLE

T3450-11BKMG

MODEL — FINISH — REFLECTOR — MARINE GRADE OPTION

LAMPING: (1) 12W MAXIMUM 2,700K LED MR16 REPLACEMENT LAMP - SPOT BEAM SPREAD - MINIMUM 400 LUMENS AND 5600 CBCP.

EXACT SPECIFICATION TO BE CONFIRMED AT TIME OF PURCHASE BASED ON CURRENT TECHNOLOGY AND MARKET AVAILABILITY.

LIGHTING SUPPLIER WILL NEED TO FURNISH SAMPLE OF FIXTURE WITH LAMP FOR REVIEW OF DIMMING AND COLOR TEMPERATURE BY OWNER, ARCHITECT, AND LIGHTING DESIGNER PRIOR TO FINALIZING SPECIFICATION.

ORDERING CODE

MODEL	TRIM FINISH		REFLECTOR		MARINE GRADE
T3450					
T3450	**-01**	White	**ANODIZED**		**MG** (optional)
	-02	Black	**...**	Aluminum (standard)	May be applied on finishes:
	-03	Gold Plated 24K	**AZ**	Azur	-01, -02, -05, -06, -11
	-04	Chrome	**BO**	Burnt Orange	and -15.
	-04BR	Brushed Chrome	**IG**	Inca Gold	
	-05	Architectural Bronze	**RU**	Ruby	
	-06	Antique Copper	**CB**	Cobalt Blue	
	-08	Antique Sliver			
	-11	Matte White	**SPECULAR**		
	-12BR	Brushed Nickel	**CL**	Clear	
	-13	Satin Nickel	**BK**	Black	
	-14	Almond	**CH**	Champagne	
	-15	Metallic Grey			
	-16	Satin Chrome	**PAINTED**		
			-01	White	
			-02	Black	
			-11	Matte White	

MARINE GRADE - Unless otherwise indicated, trims are for interior, cold and exterior locations where fixtures are not subject to direct rain or snow exposure as in soffits. MARINE GRADE treatment is recommended for exterior, shower and high salinity environment.

c UL us LISTED

MADE IN CANADA

CONTRAST LIGHTING

CONTRAST LIGHTING M. L. INC.
1009 RUE DU PARC-INDUSTRIEL
ST-JEAN-CHRYSOSTOME QC G6Z 1C5
CANADA

Tel: 1-888-839-4624
Fax: 1-877-839-7057
info@contrastlighting.com
www.contrastlighting.com

2014-04

SPECIFICATION SHEET

3 1/2" 3000 SERIES

NW3000CM

NW3000CM2
NW3000CM3

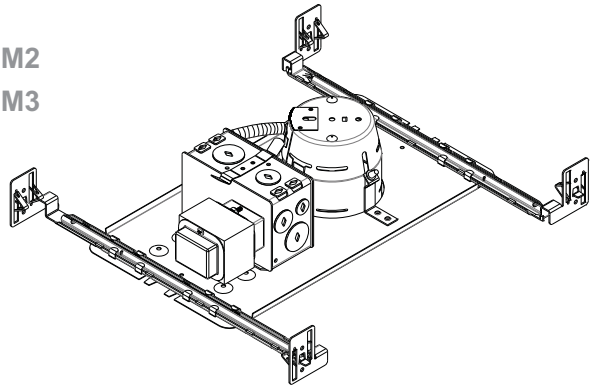

SHORT NEW CONSTRUCTION HOUSING WITH MAGNETIC TRANSFORMER

Damp Location	YES
MR16	MR16 50W MAX
Voltage	NW3000CM : 120 Volts (CAN & USA) NW3000CM2 : 277 Volts (USA) NW3000CM3 : 347 Volts (CANADA)
	Magnetic Transformer: EC50M 50 VA 120V / 12V EC50M2 50 VA 277V / 12V EC50M3 50 VA 347V / 12V
	Thermal Protector: T°C 130°C No 033
OD Cut	3 5/8" (92 mm)
LISTED	E174023
Dimensions	Overall Dimensions: Length: 13 1/2" (343 mm) | With bars: 15 3/8" (391 mm) Width: 7 3/8" (187 mm) | With bars: min 10" (254 mm) Height: 3 7/16" (94 mm)

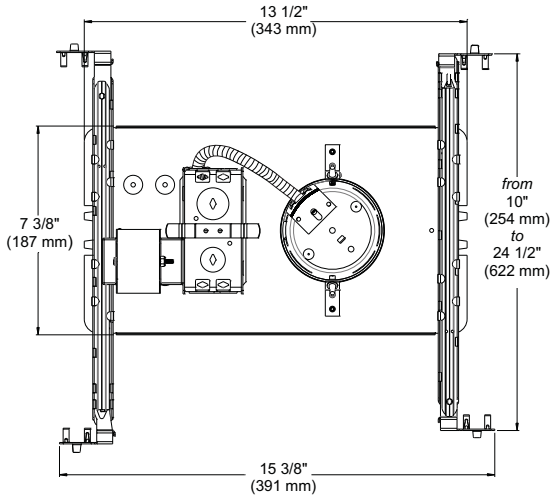

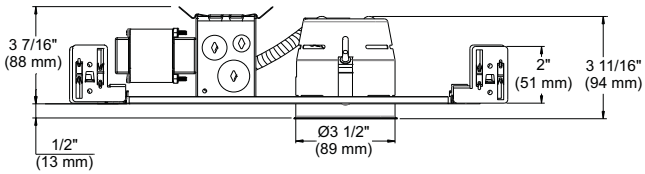

COMPATIBLE TRIMS

37W MR16			50W MR16		
R3152	S3151	T3145DG	R3151	T3145D ST	T3450D SM
R3171	S3400	T3152	R3151K	T3145W	T3450D ST
R3450D	S3400D	T3250DG	R3151W	T3165	T3450K
R3470	S3450	T3602	R3151WK	T3185	T3450W
R3470D	S3450D	T3652	R3601	T3200	T3450WK
R3602	S3500	T3671	R3601W	T3250	T3500
R3652	S3500D	T3700	R3651	T3260	T3500D SM
S3145	S3601	T3800	R3651W	T3300	T3500D ST
S3145D	S3651	T3850	T3000	T3400	T3500W
		T3900	T3100	T3400D SM	T3600
			T3125	T3400D ST	T3650
			T3145	T3400W	
			T3145D SM	T3450	

TECHNICAL SPECIFICATIONS

0.051"(1.3 mm) thickness galvanized steel
Below-ceiling accessible
Hooks: #CAN 2,088,648 and #USA 5,377,088 5,377,088
Installs on ceiling up to 7/8" thick
Perfect fit into ceiling
No light leakage

MADE IN CANADA

LISTED
Certified UL Standards

Your representative :_____

Your project :_____

CONTRAST LIGHTING INC.
1009, rue du Parc Industriel, Saint-Jean-Chrysostome QC G6Z 1C5, CANADA Tel: 1-888-839-4624 Fax: 1-877-839-7057
info@contrastlighting.com
www.contrastlighting.com

2012-11

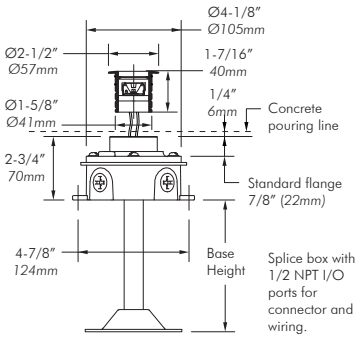

Shown with standard flange (S) and (optional) mounting base.

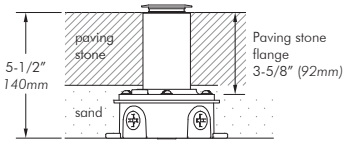

Shown with paving stone flange (P) with no base.

Specification Sheet

L01

1W / 2.5W In-grade

Application: Exterior/interior directional in-grade light for uplighting walls, columns, or architectural features.

Electrical: 1W, 350mA or 2.5W, 700mA LED.

LED Input Voltage: 4V DC or 12V AC

Power Consumption: 1.5W / 3W

Power Supply:

DC - Powered by remote 350mA (1W) or 700mA (2.5W) DC driver. Recommended LED10W350D (1W) and LED17W700D (2.5W). Dimmable drivers available (not included).

AC - Recommended TLW120MT050-01 / TLW277MT050 magnetic transformer (not included). Consult factory for dimming option.

Weight: 1.8lbs net. (0.816kg) (base extra).

Material: Solid anodized aluminum or stainless steel (303/316) with 1/4" (6mm) thick tempered glass lens, suitable for walk-over and drive-over applications. RoHS compliant.

Mounting: Comes with splice box, aluminum flange and level gauge. Can be buried in earth/gravel or cast into concrete/paving stone with or without mounting base.

Approval: Wet and dry locations. Approved to US and Canadian standards by CSA.

C US IP 66 DC AC

Emergency Driver options (remote):

MP Lighting Emergency Backup Unit
Input: 100-277V, 50/60HZ
Output: 11-36V, 16W

Bodine Emergency Micro Inverter
Input: 120/ 277V, 50/ 60Hz
Output: 120/ 277V, 60Hz, 20W

Type:
Project:
Modified:
Quantity:
Notes:

CODE	WATTAGE	COLOR	BEAM	LENS	OPTION	ANGLE BRACKET*	INPUT VOLTAGE	FLANGE HEIGHT	BASE HEIGHT	FINISH
L01 -	1 = 1W 2 = 2.5W	W27S = 2700K, std CRI W30S = 3000K, std CRI W35S = 3500K, std CRI W41S = 4100K, std CRI W20H = 2000K, high CRI W30H = 3000K, high CRI	L = Linear (5°+60°) S = spot (12°) N = narrow flood (30°) W = wide flood (120°)	C = clear F = frosted	LM = louver, matte black LB = louver, black anodized HM = hex louver, matte anodized HB = hex louver, black anodized	0 = no angle 30 = 30° angle X = custom (30° max.)	A = 12V AC (available for W20S, W27S, and W30S only) D = DC	S = standard flange 7/8" (22mm) P = paving stone flange, 3-3/8" (86mm)	0 = no base 2 = 2" (51mm) 6 = 6" (152mm)	MA = matte clear anodized BA = black anodized BZ = bronze S3 = stainless steel 303 S6 = stainless steel 316

* Max. 10° angle bracket with Linear Beam option.

* Max. 30° angle bracket with louver option.

Copyright © MP Lighting. All technical information in this document is subject to change.
09-2014

Specification Sheet

L01

1W / 2.5W IN-GRADE

Lumen test results provided by MP Lighting integrating sphere

Photometric Data:

L01
1W, 5°
Clear lens
3000K Std
2 lm

Polar Candela Distribution

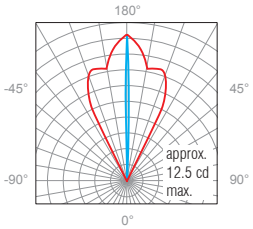

Illuminance at a Distance

	Center Beam FC	Beam Width	
18.0′	0.04	1.5′	19.0′
15.0′	0.06	1.2′	15.9′
12.0′	0.09	1.1′	12.7′
9.0′	0.15	0.7′	9.5′
6.0′	0.35	0.5′	6.3′
3.0′	1.38	0.2′	3.2′

0° Spread: 4.8° 90° Spread: 55.7°

Chromaticity Diagram (1W)

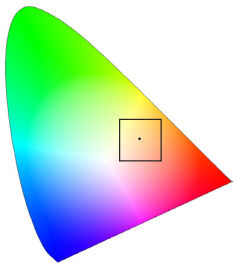

L01
1W, 12°
Clear lens
3000K Std
51m

Polar Candela Distribution

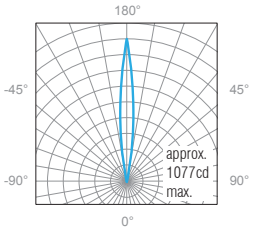

Illuminance at a Distance

	Center Beam FC	Beam Width	
18.0′	3.3	3.7′	3.7′
15.0′	4.8	3.1′	3.1′
12.0′	7.5	2.5′	2.5′
9.0′	13.3	1.8′	1.8′
6.0′	29.9	1.2′	1.2′
3.0′	119.7	0.6′	0.6′

0° Spread: 5.1° 90° Spread: 55.4°

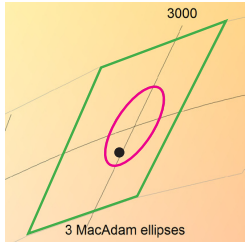

ANSI Bin MacAdam Ellipse

L01
1W, 30°
Clear lens
3000K Std
61 lm

Polar Candela Distribution

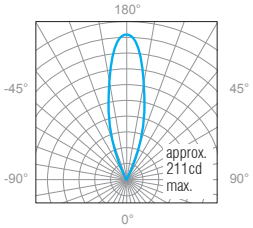

Illuminance at a Distance

	Center Beam FC	Beam Width	
18.0′	0.7	9.4′	9.4′
15.0′	0.9	7.8′	7.8′
12.0′	1.5	6.3′	6.2′
9.0′	2.6	4.7′	4.7′
6.0′	5.9	3.1′	3.1′
3.0′	23.4	1.6′	1.6′

0° Spread: 29.3° 90° Spread: 29.2°

L01
1W, 120°
Clear lens
3000K Std
51 lm

Polar Candela Distribution

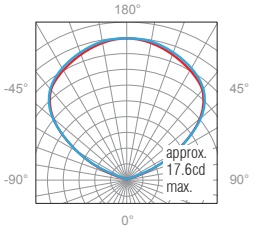

Illuminance at a Distance

	Center Beam FC	Beam Width	
18.0′	0.05	55.8′	56.1′
15.0′	0.08	46.5′	46.7′
12.0′	0.12	37.2′	37.4′
9.0′	0.22	27.9′	28.0′
6.0′	0.49	18.6′	18.7′
3.0′	1.96	9.3′	9.3′

0° Spread: 114.4° 90° Spread: 114.6°

Note: Various operating factors may cause differences between lab and field results. As specifications may change without notice, please refer to the LED Lamp Index located in the "Downloads" section of each product webpage for the most current information.

Copyright © MP Lighting. All technical information in this document is subject to change. 09-2014

Specification Sheet

L01

1W / 2.5W IN-GRADE

Lumen test results provided by MP Lighting integrating sphere

Photometric Data:

L01
2.5W, 5°
Clear lens
3000K Std
3 lm

Polar Candela Distribution

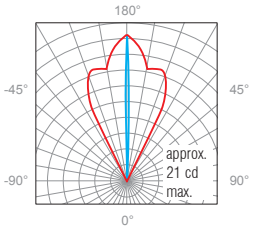

Illuminance at a Distance

	Center Beam FC	Beam Width	
18.0′	0.06	1.5′	18.9′
15.0′	0.09	1.2′	15.7′
12.0′	0.14	1.0′	12.6′
9.0′	0.26	0.7′	9.4′
6.0′	0.58	0.5′	6.3′
3.0′	2.30	0.2′	3.1′

0° Spread: 4.8° 90° Spread: 55.3°

Chromaticity Diagram (1W)

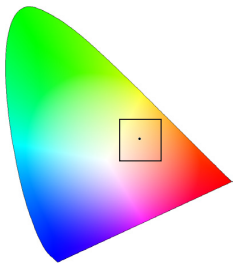

L01
2.5W, 12°
Clear lens
3000K Std
80 lm

Polar Candela Distribution

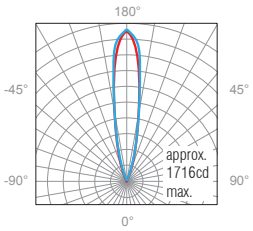

Illuminance at a Distance

	Center Beam FC	Beam Width	
18.0′	5.3	3.7′	3.7′
15.0′	7.6	3.1′	3.1′
12.0′	11.9	2.5′	2.4′
9.0′	21.2	1.8′	1.8′
6.0′	47.7	1.2′	1.2′
3.0′	190.7	0.6′	0.6′

0° Spread: 11.7° 90° Spread: 11.6°

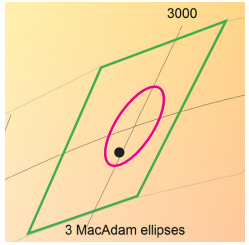

ANSI Bin MacAdam Ellipse

L01
2.5W, 30°
Clear lens
3000K Std
82 lm

Polar Candela Distribution

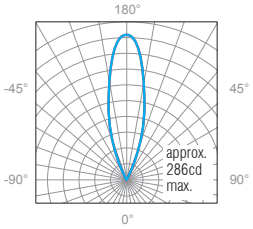

Illuminance at a Distance

	Center Beam FC	Beam Width	
18.0′	0.9	9.4′	9.4′
15.0′	1.3	7.8′	7.8′
12.0′	2.0	6.3′	6.2′
9.0′	3.5	4.7′	4.7′
6.0′	7.9	3.1′	3.1′
3.0′	31.8	1.6′	1.6′

0° Spread: 29.2° 90° Spread: 29.1°

L01
2.5W, 120°
Clear lens
3000K Std
78 lm

Polar Candela Distribution

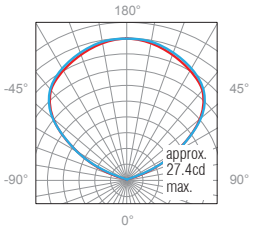

Illuminance at a Distance

	Center Beam FC	Beam Width	
18.0′	0.08	55.4′	55.3′
15.0′	0.12	46.2′	46.1′
12.0′	0.19	36.9′	36.9′
9.0′	0.34	27.7′	27.6′
6.0′	0.76	18.5′	18.4′
3.0′	3.04	9.2′	9.2′

0° Spread: 114.0° 90° Spread: 113.9°

Note: Various operating factors may cause differences between lab and field results. As specifications may change without notice, please refer to the LED Lamp Index located in the "Downloads" section of each product webpage for the most current information.

Copyright © MP Lighting. All technical information in this document is subject to change.
08-2014

Specification Sheet

L01

1W / 2.5W IN-GRADE

Lumen test results provided by MP Lighting integrating sphere

Light Distribution:

1Watt

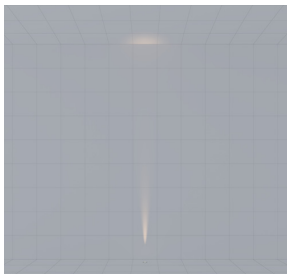

5° (Linear Beam), Clear lens, Matte clear anodized

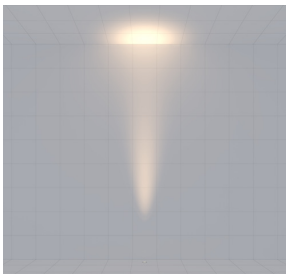

12° (Spot Beam), Clear lens, Matte clear anodized

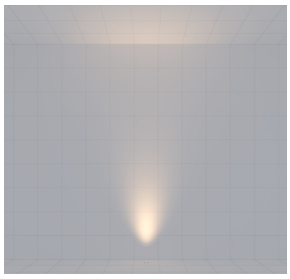

30° (Narrow Flood Beam), Clear lens, Matte clear anodized

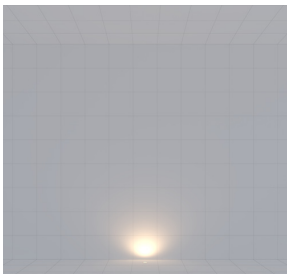

120° (Wide Flood Beam), Clear lens, Matte clear anodized

2.5Watt

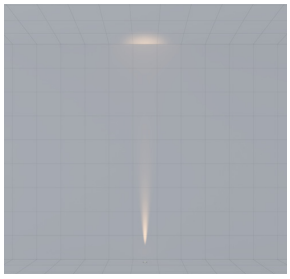

5° (Linear Beam), Clear lens, Matte clear anodized

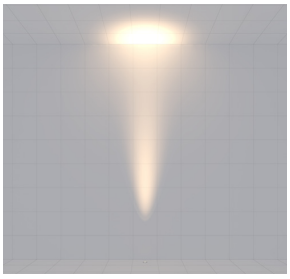

12° (Spot Beam), Clear lens, Matte clear anodized

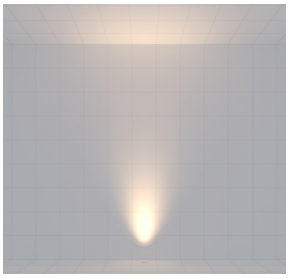

30° (Narrow Flood Beam), Clear lens, Matte clear anodized

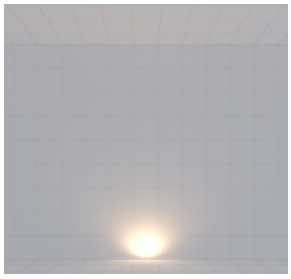

120° (Wide Flood Beam), Clear lens, Matte clear anodized

Note: Various operating factors may cause differences between lab and field results. As specifications may change without notice, please refer to the LED Lamp Index located in the "Downloads" section of each product webpage for the most current information.

[✓] MP LIGHTING®
t 1.877.708.1184 f 604.708.1185 www.mplighting.com
16 West 4th Avenue, Vancouver BC, Canada, V5Y 1G3

Copyright © MP Lighting. All technical information in this document is subject to change.
08-2014

Copyright © MP Lighting. All technical information in this document is subject to change. 10-2013

Remote 120V Magnetic Transformer

TLW120MT050-01

SPEC SHEET

Features:

- Hard wired remote transformer.
- Small magnetic dimmable halogen and LED transformer
- Includes primary and secondary self-reset circuit breakers.
- Indoor compliant.

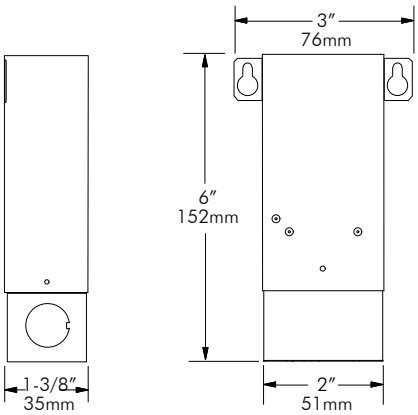

AC Input Voltage:	120VAC, 60Hz
AC Output Voltage:	12V
Output Wattage:	50W Max
Short Circuit Protection:	Yes
Overload Protection:	Yes
Dimming Function:	Works with a magnetic low voltage dimmer.
Ambient Temperature:	40°C Max (104°F Max)
Case Temperature:	70°C Max (158°F Max)*
Case Material:	Steel
Weight:	0.91kg (2 lbs)
Approval:	Dry locations only. ETL Listed (Class 2).

**Enclosure temperature does not exceed 70°C in a 40°C ambient, fully loaded.*

Note: Consult factory for wiring length and details.

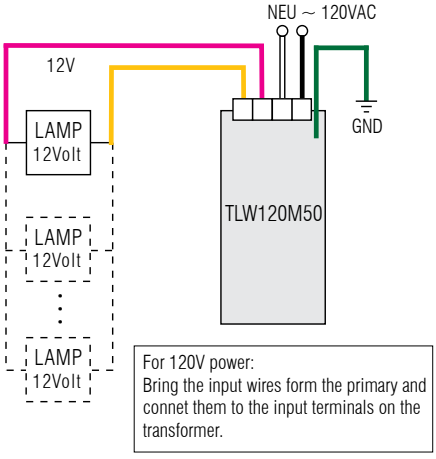

Max. load depends on wattage of fixture.

LAMP 12Volt = 12 Volt Lamps Only

ORDER CODE

TLW120MT050-01

LIGHTING SUPPLIER TO CONFIRM QUANTITY AND SIZE REQUIRED.

[Project]

[Quantity]

[Notes]

MP LIGHTING®
t 604.708.1184 f 604.708.1185 www.mplighting.com
16 West 4th Avenue, Vancouver BC V5Y 1G3, Canada

Job Name: **Fixture Type:** **Qty:**

Line Voltage by Times Square Lighting

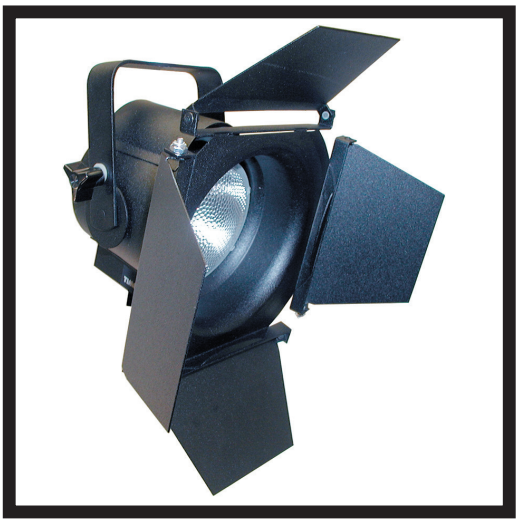

Manufactured in the USA - IBEW

c UL us LISTED

C4M 50-75W PAR30

The C4M is a compact, theatrical style unit designed for Halogen Performance Plus PAR30 lamps. Available in 50, 60 and 75-watts, these lamps come in a variety of beam spreads ranging from 9 to 35 degrees.

The C4M is ideal for lighting in galleries, museums and retail applications. Equipped with 4-way locking barndoors to control light spill and an internal accessory holder that accepts louvers and filters. Available in standard black, white and silver finishes. Custom colors are available by request and at an additional charge.

Features:

- Theatrical design
- Locking barndoors
- Accepts 50, 60 and 75-watt PAR30 lamps
- Numerous mounting options and accessories
- Weight: 2.7 lbs

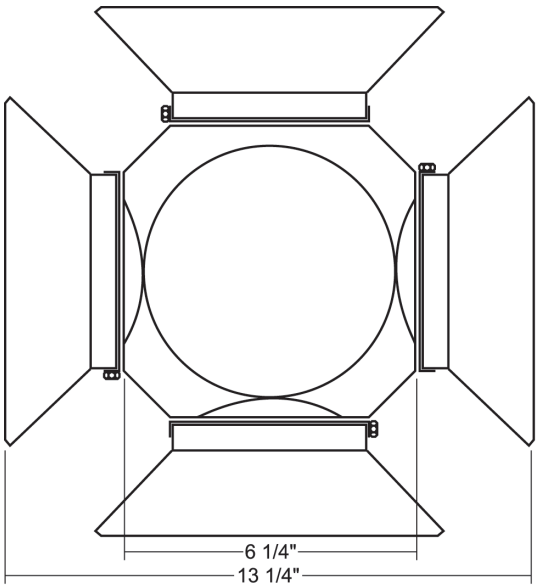

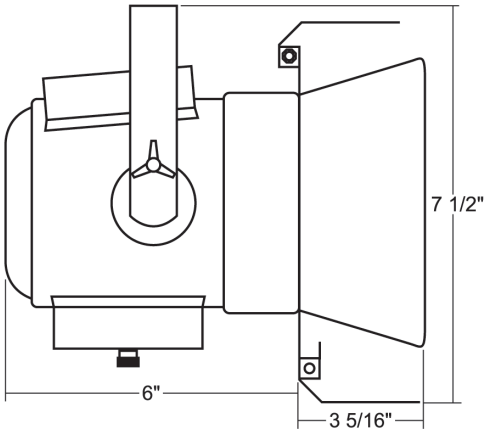

Last updated 04/09/2014.

TIMES SQUARE LIGHTING
5 Holt Drive • Stony Point, NY 10980
Phone: 845-947-3034 • Fax: 845-947-3047 • www.tslight.com
Specifications are subject to change without notice.

Mounting Options

AD1
Track adapter for commercial grade 1 & 2 circuit track. 120V. For use with Lightweight fiixtures

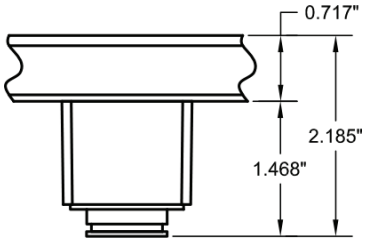

T1
Track adapter for commercial grade 1 & 2 circuit track. 120V. For use with larger, heavier fixtures.

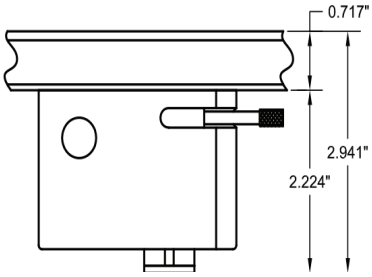

TA2
Track adapter for G-Series specification grade 2-circuit track. 120V.

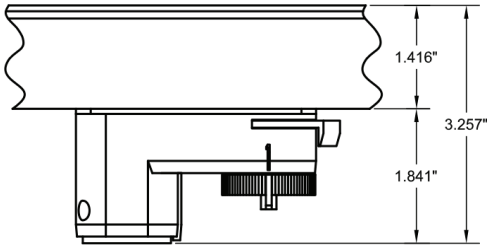

TA3
Track adapter for G-Series specification grade 3-circuit track. 120V.

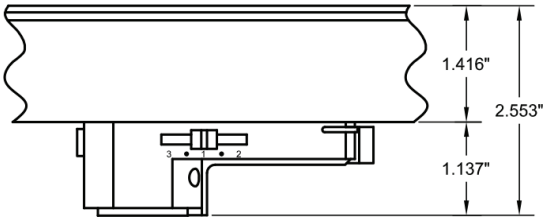

TA1 / TE2 (2 circuit)
Track adapter for E-Series specification grade track. 1 or 2 circuit. 120V.

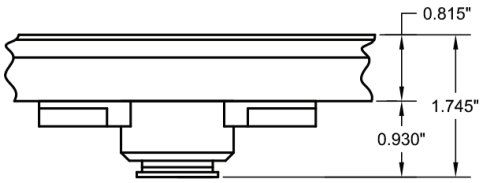

ST2
2 circuit track adapter for Data Bus. Specification grade track. 120V.

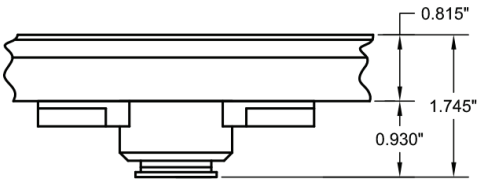

CM4
Canopy mount.

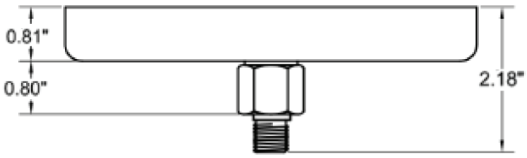

US1
6 5/8" x 1 1/2" Unistrut adapter.

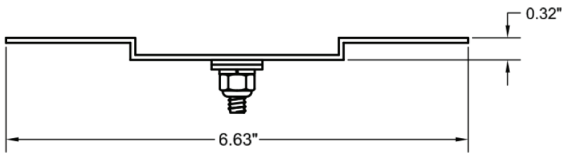

Mounting Options

TB4
6 1/4" Portable wall mount/table base floor, wall or table use.

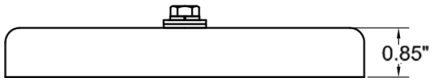

TB8
8" x 8" Portable table base for floor or table use.

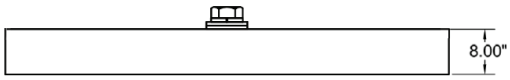

MC
Light duty pipe clamp for small fixtures. For pipes up to 1 5/16" O.D.

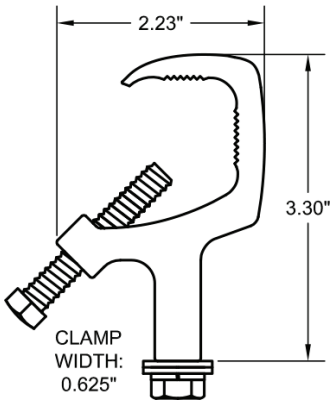

MN
Medium duty pipe clamp for small to large fixtures. For pipes up to 2" O.D.

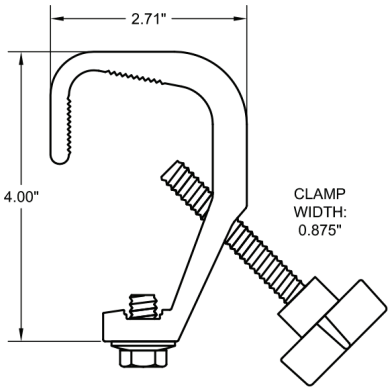

PC9M
Heavy duty pipe clamp for large, heavy fixtures. For pipes up to 2" O.D.

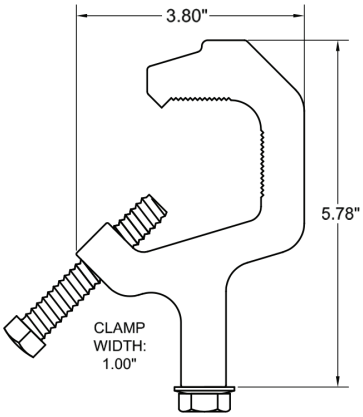

C4M 50-75W PAR30

Specify:	C4M	-		-		-	
	MODEL NUMBER		**FINISH**		**MOUNTING (optional)**		**ACCESSORIES (optional)**
Example:	C4m	-	-B	-	-T1	-	-LV17

Photometric Data

75PAR30/H/SP10 10°

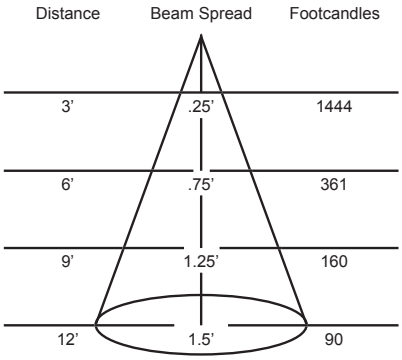

75PAR30/H/FL25 25°

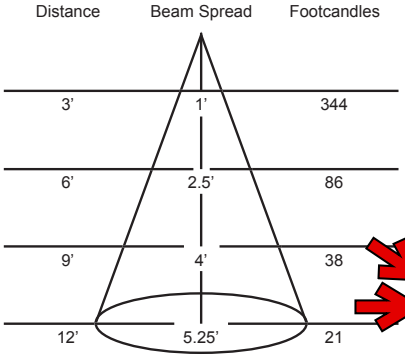

75PAR30/H/FL35 35°

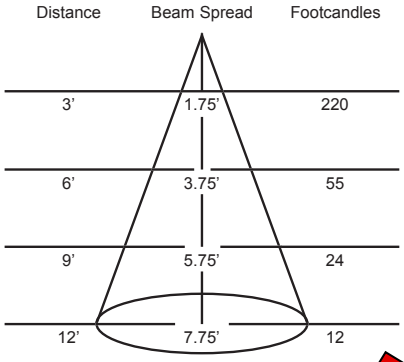

Lamp Types

50PAR30/HIR/SP9 50W; 3000Hrs; 9° Beam; 13000 CBCP; 2810°K Color Temp

50PAR30/HIR/FL25 50W; 3000Hrs; 25° Beam; 2700 CBCP; 2810°K Color Temp

50PAR30/HIR/FL35 50W; 3000Hrs; 35° Beam; 1500 CBCP; 2810°K Color Temp

60PAR30/H/SP10 60W; 3000Hrs; 10° Beam; 10000 CBCP; 2800°K Color Temp

60PAR30/H/FL25 60W; 3000Hrs; 25° Beam; 2400 CBCP; 2800°K Color Temp

60PAR30/H/FL35 60W; 3000Hrs; 35° Beam; 1700 CBCP; 2800°K Color Temp

75PAR30/H/SP10 75W; 3000Hrs; 10° Beam; 13000 CBCP; 2830°K Color Temp

75PAR30/H/FL25 75W; 3000Hrs; 25° Beam; 3100 CBCP; 2830°K Color Temp

75PAR30/H/FL35 75W; 3000Hrs; 35° Beam; 2000 CBCP; 2830°K Color Temp

Accessories

LV17	Louver
CF17	Color Frame
GF17	Glass Color Filter
DF17	Dichroic Color Filter
GF17-600	5°x50° Linear Lens
GF17-601	Beam Softener
GF17-673	50°x50° Spread Lens
GF17-703	UV Blocking Filter
CC18	Coiled Cord
SC-24	Safety Cable
IP	Integral Dimmer

Extension Wands

SP 12	12" Stem
SP 18	18" Stem
SP 24	24" Stem
SP X	Custom Length

Finish

B	Black
W	White
S	Silver
CC	Custom Color

(1) SPREAD LENS (SPREAD TBD)
(1) GLASS COLOR FILTER (COLOR TBD)

LAMPING: (1) 14W MAXIMUM 2,700K LED PAR30 REPLACEMENT LAMP - SPOT BEAM SPREAD - MINIMUM 1150 LUMENS AND 11700 CBCP.

EXACT SPECIFICATION TO BE CONFIRMED AT TIME OF PURCHASE BASED ON CURRENT TECHNOLOGY AND MARKET AVAILABILITY.

LIGHTING SUPPLIER WILL NEED TO FURNISH SAMPLE OF FIXTURE WITH LAMP FOR REVIEW OF DIMMING AND COLOR TEMPERATURE BY OWNER, ARCHITECT, AND LIGHTING DESIGNER PRIOR TO FINALIZING SPECIFICATION.

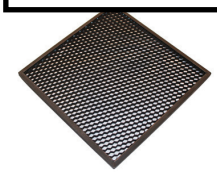

SS3 SOFT STRIP 2.4W 24VDC HIGH OUTPUT, ECONOMY GRADE (75+CRI)

REV08.29.13

SS3-24V-_-WW

Maximum Length Before Refeeding: 40 Ft*

LENGTH IN FEET	TOTAL WATTAGE	LENGTH IN FEET	TOTAL WATTAGE
1	3	21	51
2	5	22	53
3	8	23	56
4	10	24	58
5	12	25	60
6	15	26	63
7	17	27	65
8	20	28	68
9	22	29	70
10	24	30	72
11	27	31	75
12	29	32	77
13	32	33	80
14	34	34	82
15	36	35	84
16	39	36	87
17	41	37	89
18	44	38	92
19	46	39	94
20	48	40	96

25 Ft maximum when used with TEB-60L-24DC
*40 Ft maximum when used with PSB-96W-010-24VDC

SS3-24V-4IN-WW
4 Inch Soft Strip

Description:
Soft Strip (SS3) provides high levels of light with warm white or very warm white LEDs. The 1/2" wide flexible copper strip, with optically clear protective coating is sold in 1 ft increments up to 40 feet. Includes plug-in connectors on each end and 6 ft power feed cable. For custom lengths, smaller segments are available in 4 inch increments (sold separately). Use plug-in flexible connectors for making turns and custom configurations. At only 2.4 watts per foot, this economical system dims with a standard electronic low-voltage dimmer when using TEB-60L-24DC (Edge Lighting's exclusive electronic power supply). Self-adhering SS3 mounts to most smooth finished surfaces with industrial strength 3M tape (provided on back of strip); some unfinished surfaces may require screw-in mounting clips (sold separately). Designed for indoor, open-air environments, SS3 includes a flexible aluminum heat sink to extend LED life. Fixtures include a 5 year warranty.

Applications:
Indoor Only - Task lighting, inside/under/above cabinet, office work stations, wine racks, shelves, accent and toe kicks. ETL listed to conform to UL 2108 for closet and under-cabinet applications.

Lamp:
18 warm-white (3,070K) or very warm-white (2,540K) LEDs per foot 75+ CRI
Warm White: 161 lumens per foot
LED lamps consume 2.4 watts per foot at 24VDC
48 lumens per watt (including power supply)

Average Lamp Life:
32,000 hours

Power Supply (24VDC):
TEB-60L-24DC 120VAC input, 24VDC 60 watt output (25 foot max)
PSB-96W-010-24VDC 120-277VAC input, 96 watt output (40 foot max)
PSB-2X96W-010-24VDC 120-277VAC input, 192 watt output (40 foot max)

Dimming:
Dimmable with low voltage electronic dimmer using TEB-60L-24DC
Lutron: Diva #DVELV-300P, Skylark #SELV-300P, Maestro #MAELV-600,
PSB power supplies use 0-10V dimmer Lightolier® Sunrise #ZP600FAM120

Mounting Straps & Clips:

SS-SU
Use U-Strap every 6 to 12 inches for extra support (30 per package).

SS-ST
Use Tie Strap every 6 to 12 inches for extra support (30 per package).

SS-MCL
Mounts beneath strip, snapping strip in place for additional support (10 per package).

System		Voltage		Length		Color Temperature
SS3	–	24V	–	4IN	–	WW
SS3 Soft Strip 2.4W per Ft		**24V** 24 Volt		**4IN** 4 Inch		**WW** Warm White (3,070K) **VW** Very Warm White (2,540K)

System		Voltage		Length in Feet		Color Temperature
SS3	–	24V	–	40	–	WW
SS3 Soft Strip 2.4W per Ft		**24V** 24 Volt		Sold in 1 ft increments up to 40ft (Example 40=40')		**WW** Warm White (3,070K) **VW** Very Warm White (2,540K)

LIGHTING SUPPLIER TO FURNISH FIXTURE WITH LENGTHS, ALUMINUM HEAT SINK TAPE, CONNECTORS, WHIPS, SPLICE BOXES, AND MOUNTING DEVICES AS REQUIRED BY APPLICATION.

SIGNATURE:
DATE:

Edge LIGHTING
A Division of PureEdge Lighting

1718 W. Fullerton Ave. Chicago, IL 60614 P: 773.770.1195 F: 773.935.5613 www.edgelighting.com

CLASS 2 DC REGULATED POWER SUPPLIES

LIGHTING SUPPLIER TO CONFIRM QUANTITY AND SIZE REQUIRED.

UL Listed, CSA Approved, Class 2
UL1012 / UL1310 Outdoor Rated

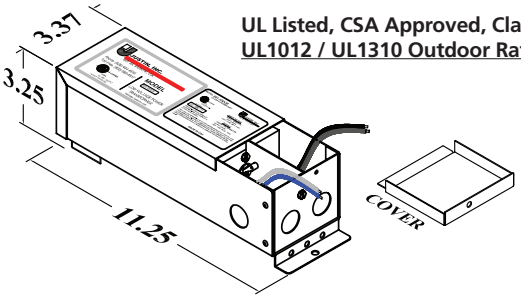

Model: **361-12DCR, 481-24DCR, 601-12DCR, 961-24DCR**

UL Recognized, Class 2
UL48 / UL1310 Outdoor Rated

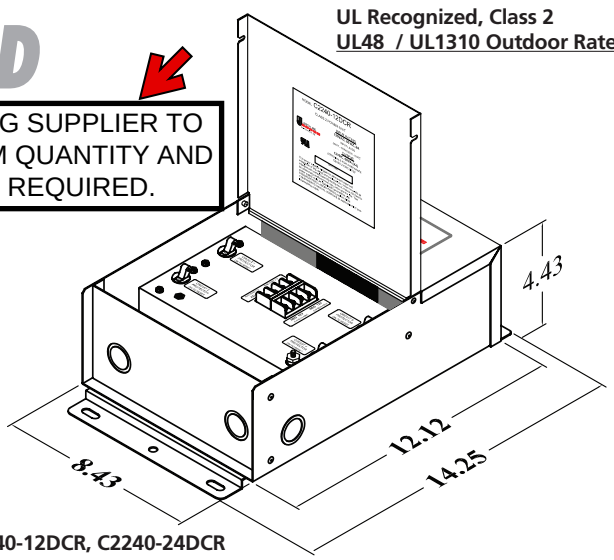

Model: **C2240-12DCR, C2240-24DCR**

SPECIFICATIONS AND ORDERING INFORMATION - SINGLE CIRCUIT — DIMMABLE

INDOOR/OUTDOOR ENCLOSURE, UL LISTED, FILE E325754, CSA APPROVED, MANUAL RESET OVERLOAD PROTECTION

	Input			Output		
Model	VAC	Hz	AMPS (Max.)	VDC	AMPS (Max.)	WATTS
361-12DCR	120	50/60	0.58	12VDC	3A	36
362-12DCR-240	240	50/60	0.28	12VDC	3A	36
363-12DCR-277	277	50/60	0.24	12VDC	3A	36
481-24DCR	120	50/60	0.63	24VDC	2A	48
482-24DCR-240	240	50/60	0.33	24VDC	2A	48
483-24DCR-277	277	50/60	0.28	24VDC	2A	48
601-12DCR	120	50/60	0.81	12VDC	5A	60
602-12DCR-240	240	50/60	0.41	12VDC	5A	60
603-12DCR-277	277	50/60	0.38	12VDC	5A	60
961-24DCR	120	50/60	1.12	24VDC	4A	96
962-24DCR-240	240	50/60	0.57	24VDC	4A	96
963-24DCR-277	277	50/60	0.50	24VDC	4A	96

SPECIFICATIONS AND ORDERING INFORMATION - MULTIPLE CIRCUIT — DIMMABLE

INDOOR / OUTDOOR ENCLOSURE, UL RECOGNIZED, FILE E235322, MANUAL RESET OVERLOAD PROTECTION

	Input			Output			
Model	VAC	Hz	AMPS (Max.)	VDC	AMPS (Max.)		WATTS
C2240-12DCR	120	50/60	2.2	12VDC	5A Per Circuit	4 x 60VA Class 2 Circuits	240
C2240-24DCR	120	50/60	2.5	24VDC	4A Per Circuit	3 x 96VA Class 2 Circuits	288

Above units available in 240 or 277V inputs. Order "-240" or "-277". Important - Do not interconnect output circuits

INDIVIDUAL CIRCUIT DC POWER SUPPLY SPECIFICATIONS

Description	24V Model Value	12V Model Value	Unit
Input Voltage	120 / 240 / 277	120 / 240 / 277	Volts AC, 1 AMP Max.
Output Voltage	24.0 +/-0.3	12.0 +/-0.3	Volts DC
Output Current	2A, 48W/4A, 96W	3A, 36W/5A, 60W	Amps
Current Limit	2.5/4.5 +/-0.25	3.5/5.5 +/-0.25	Amps

Details		Unit
Load Regulation	2%	Volts
Line Regulation	5%	Volts
Input Frequency	50-60	Hertz
Efficiency	80 Typical	%
MTBF	100,000	1 Hours
Operating Environment (AMB)	Minus 30 to +60	Deg "C"
Function Surface Temp. (25 C AMB)	-40 to +80	Deg "C"
Storage Temp.	Minus 65 to +90	Deg "C"
Humidity	100 (Non Cond)	%
Size	11.25x 3.37 x 3.25	Inches
Shipping Weight	7.0	Pounds

APPROVALS - UL Listed, Class 2 Power Supplies, UL1012 UL1310, UL48 Recognized Sign Accessories.
CONSTRUCTION - Indoor/Outdoor Type 3R Enclosure
WALL MOUNTING - Conduit Access Wiring Compartment
3 Year Limited Warranty

Compatible with forward phase dimmers designed specifically for magnetic or inductive circuits. See PDF for detailed application information.

JUSTIN, INC.

ELECTRONIC PRODUCTS DIVISION
2663 No. Lee Avenue
South El Monte, CA 91733
626 444-4516 • Fax 626 444-9462
www.justininc.com

Job Name: _____ **Fixture Type:** _____ **Qty:** _____

Commercial Grade Track

Single Circuit **Dual Circuit**

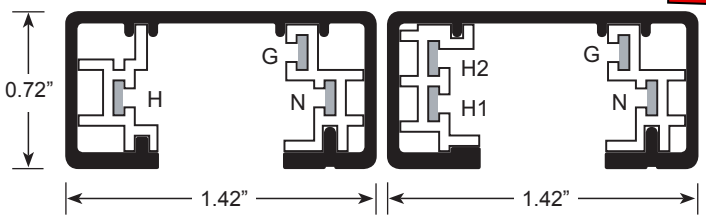

Track Section

		1-Circuit	2-Circuit
Black	2 ft.	L002B	H2T02B
	4 ft.	L004B	H2T04B
	8 ft.	L008B	H2T08B
White	2 ft.	L002W	H2T02W
	4 ft.	L004W	H2T04W
	8 ft.	L008W	H2T08W

Custom lengths available. Please consult factory.

LIGHTING SUPPLIER TO FURNISH WITH END CAPS, CONNECTORS, FEEDS AND TRACK LENGTHS AS REQUIRED BY LAYOUT.

Components (continued on back)

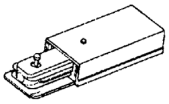

End Feed

Used when energizing track from an outlet box.

	1-Circuit	2-Circuit
Black	L010B	H2001B
White	L010W	H2001W

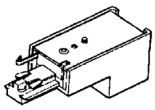

End Feed for Conduit

Used when necessary to feed surface mounted track with conduit.

	1-Circuit	2-Circuit
Black	L017B	H2008B
White	L017W	H2008W

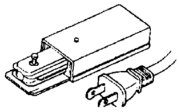

End Feed with Plug

Used when energizing track from a wall receptacle.

	1-Circuit
Black	L010LB
White	L010LW

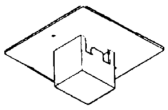

Floating Feed

Used when energizing track from any point along the track run.

	1-Circuit
Black	L011B
White	L011W

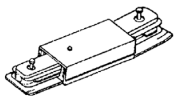

Center Feed

Used to join two sections of track together in a straight line. May be used as a feed point.

	1-Circuit	2-Circuit
Black	L012PB	H2005IB
White	L012PW	H2005IW

Last updated 08/05/2010.

TIMES SQUARE LIGHTING
5 Holt Drive • Stony Point, NY 10980
Phone: 845-947-3034 • Fax: 845-947-3047 • www.tslight.com
Specifications are subject to change without notice.

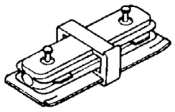

Straight Connector

Used to join two sections of track together in a straight line.

	1-Circuit	2-Circuit
Black	L012B	H2003B
White	L012W	H2003W

Flex Connector

Used to join two sections of track together to create angles from 0° to 360°. Can be flexed on horizontal or vertical planes.

	1-Circuit	2-Circuit
Black	L018B	H2004B
White	L018W	H2004W

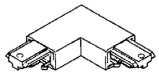

L Connector

Used to join two sections of track together at a 90º angle.

	1-Circuit	2-Circuit
Black	L014B	H2005LB
White	L014W	H2005LW

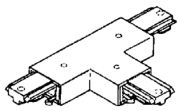

T Connector

Used to join three sections of track together in a “T” configuration.

	1-Circuit	2-Circuit
Black	L015B	H2006FB
White	L015W	H2006FW

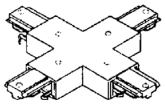

X Connector

Used to join four sections of track together in an “X” configuration.

	1-Circuit	2-Circuit
Black	L016B	H2007B
White	L016W	H2007W

Cover Plate

Used to cover an outlet box.

	1-Circuit	2-Circuit
Black	L019B	L019B
White	L019W	L019W

End Cap

Used to end any open configuration of track.

	1-Circuit	2-Circuit
Black	L024B	L024B
White	L024W	L024W

Stem Mount Kit

Used to mount track.

	1-Circuit	2-Circuit
12”	SK12	SK12
18”	SK18	SK18
24”	SK24	SK24
36”	SK36	SK36

Custom lengths available. Please consult factory.

Job Name: **Fixture Type:** **Qty:**

Line Voltage by Times Square Lighting

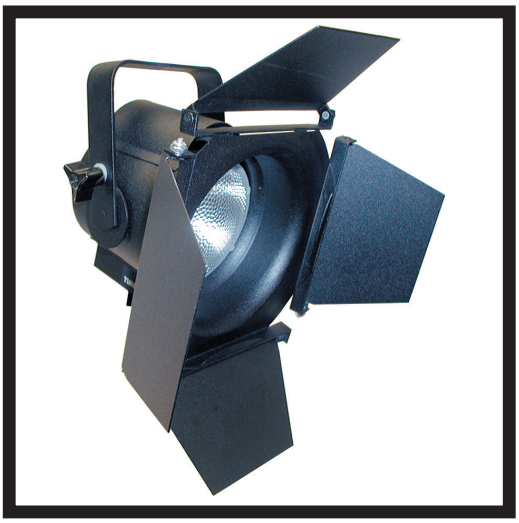

Manufactured in the USA - IBEW

c UL us LISTED

C4M 50-75W PAR30

The C4M is a compact, theatrical style unit designed for Halogen Performance Plus PAR30 lamps. Available in 50, 60 and 75-watts, these lamps come in a variety of beam spreads ranging from 9 to 35 degrees.

The C4M is ideal for lighting in galleries, museums and retail applications. Equipped with 4-way locking barndoors to control light spill and an internal accessory holder that accepts louvers and filters. Available in standard black, white and silver finishes. Custom colors are available by request and at an additional charge.

Features:

- Theatrical design
- Locking barndoors
- Accepts 50, 60 and 75-watt PAR30 lamps
- Numerous mounting options and accessories
- Weight: 2.7 lbs

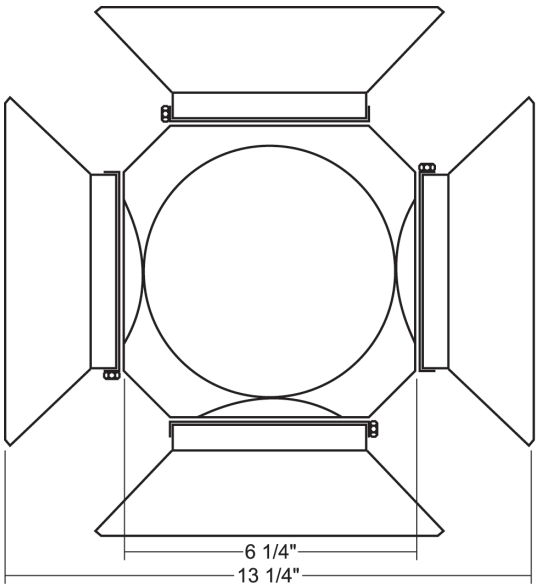

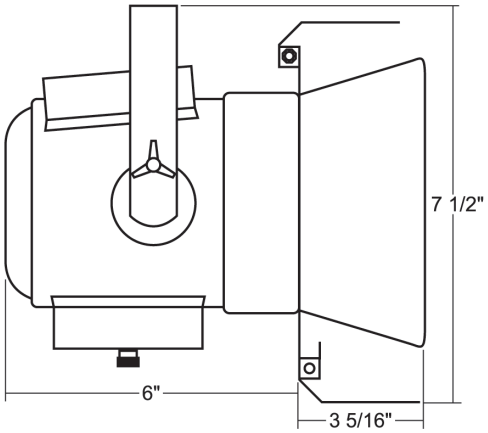

Last updated 04/09/2014.

TIMES SQUARE LIGHTING
5 Holt Drive • Stony Point, NY 10980
Phone: 845-947-3034 • Fax: 845-947-3047 • www.tslight.com
Specifications are subject to change without notice.

Mounting Options

AD1
Track adapter for commercial grade 1 & 2 circuit track. 120V. For use with Lightweight fiixtures

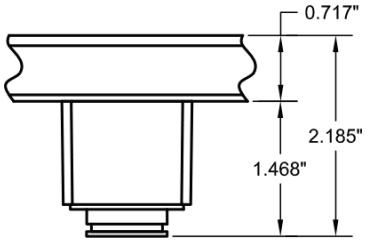

T1
Track adapter for commercial grade 1 & 2 circuit track. 120V. For use with larger, heavier fixtures.

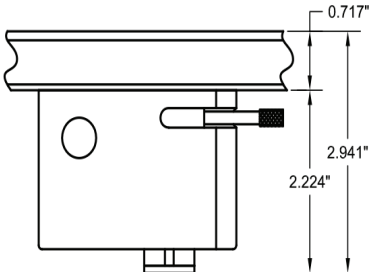

TA2
Track adapter for G-Series specification grade 2-circuit track. 120V.

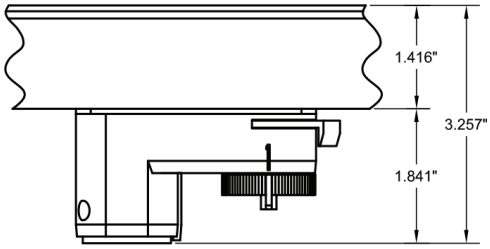

TA3
Track adapter for G-Series specification grade 3-circuit track. 120V.

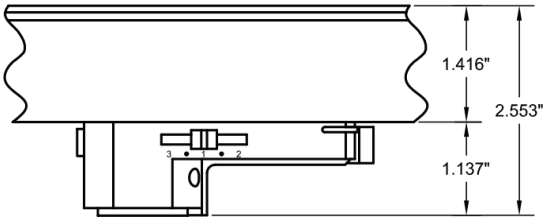

TA1 / TE2 (2 circuit)
Track adapter for E-Series specification grade track. 1 or 2 circuit. 120V.

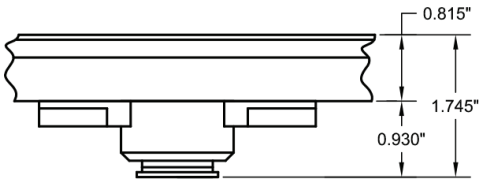

ST2
2 circuit track adapter for Data Bus. Specification grade track. 120V.

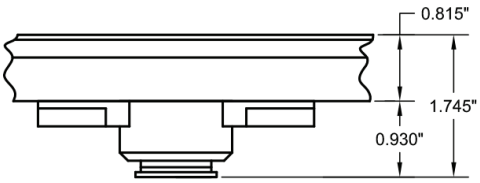

CM4
Canopy mount.

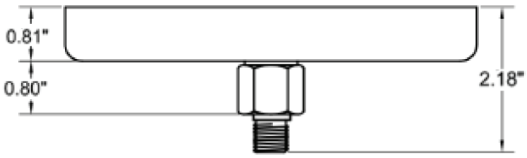

US1
6 5/8" x 1 1/2" Unistrut adapter.

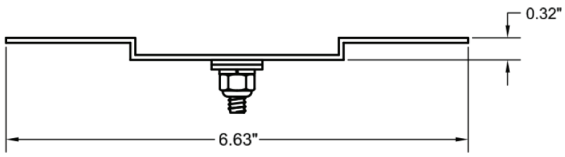

Mounting Options

TB4
6 1/4" Portable wall mount/table base floor, wall or table use.

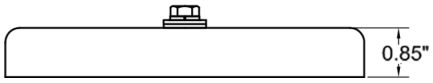

TB8
8" x 8" Portable table base for floor or table use.

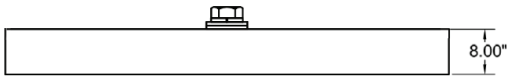

MC
Light duty pipe clamp for small fixtures. For pipes up to 1 5/16" O.D.

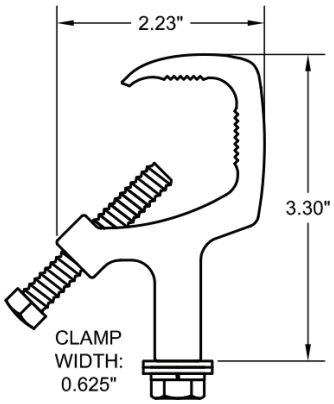

MN
Medium duty pipe clamp for small to large fixtures. For pipes up to 2" O.D.

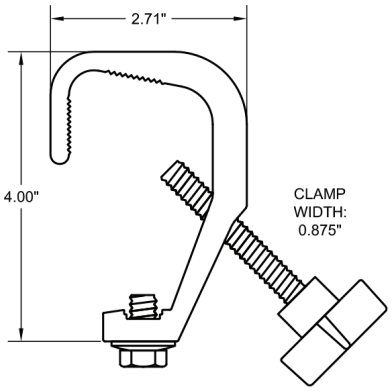

PC9M
Heavy duty pipe clamp for large, heavy fixtures. For pipes up to 2" O.D.

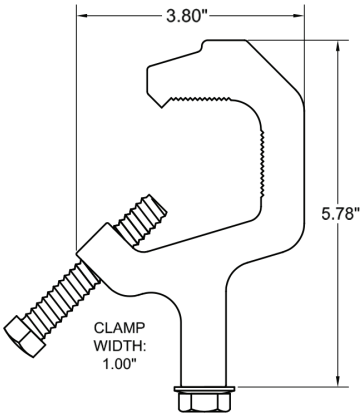

C4M 50-75W PAR30

Specify:	C4M	-		-		-	
	MODEL NUMBER		**FINISH**		**MOUNTING (optional)**		**ACCESSORIES (optional)**
Example:	C4m	-	-B	-	-T1	-	-LV17

Photometric Data

75PAR30/H/SP10 10°

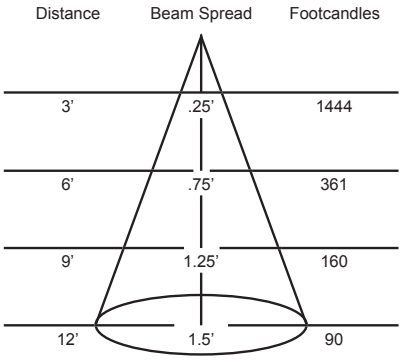

75PAR30/H/FL25 25°

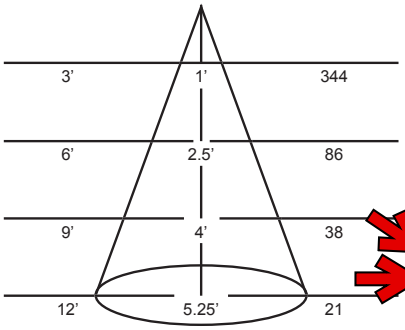

75PAR30/H/FL35 35°

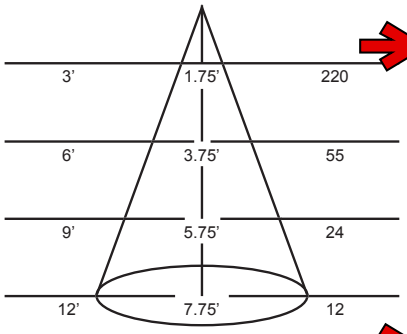

Lamp Types

50PAR30/HIR/SP9 50W; 3000Hrs; 9° Beam; 13000 CBCP; 2810°K Color Temp

50PAR30/HIR/FL25 50W; 3000Hrs; 25° Beam; 2700 CBCP; 2810°K Color Temp

50PAR30/HIR/FL35 50W; 3000Hrs; 35° Beam; 1500 CBCP; 2810°K Color Temp

60PAR30/H/SP10 60W; 3000Hrs; 10° Beam; 10000 CBCP; 2800°K Color Temp

60PAR30/H/FL25 60W; 3000Hrs; 25° Beam; 2400 CBCP; 2800°K Color Temp

60PAR30/H/FL35 60W; 3000Hrs; 35° Beam; 1700 CBCP; 2800°K Color Temp

75PAR30/H/SP10 75W; 3000Hrs; 10° Beam; 13000 CBCP; 2830°K Color Temp

75PAR30/H/FL25 75W; 3000Hrs; 25° Beam; 3100 CBCP; 2830°K Color Temp

75PAR30/H/FL35 75W; 3000Hrs; 35° Beam; 2000 CBCP; 2830°K Color Temp

Accessories

LV17	Louver
CF17	Color Frame
GF17	Glass Color Filter
DF17	Dichroic Color Filter
GF17-600	5°x50° Linear Lens
GF17-601	Beam Softener
GF17-673	50°x50° Spread Lens
GF17-703	UV Blocking Filter
CC18	Coiled Cord
SC-24	Safety Cable
IP	Integral Dimmer

Extension Wands

SP 12	12" Stem
SP 18	18" Stem
SP 24	24" Stem
SP X	Custom Length

Finish

B	Black
W	White
S	Silver
CC	Custom Color

(1) SPREAD LENS (SPREAD TBD)
(1) GLASS COLOR FILTER (COLOR TBD)

LAMPING: (1) 14W MAXIMUM 2,700K LED PAR30 REPLACEMENT LAMP - SPOT BEAM SPREAD - MINIMUM 1150 LUMENS AND 11700 CBCP.

EXACT SPECIFICATION TO BE CONFIRMED AT TIME OF PURCHASE BASED ON CURRENT TECHNOLOGY AND MARKET AVAILABILITY.

LIGHTING SUPPLIER WILL NEED TO FURNISH SAMPLE OF FIXTURE WITH LAMP FOR REVIEW OF DIMMING AND COLOR TEMPERATURE BY OWNER, ARCHITECT, AND LIGHTING DESIGNER PRIOR TO FINALIZING SPECIFICATION.

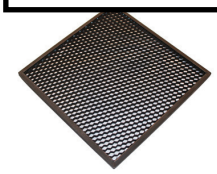

Date: _____ Type: _____

Firm Name: _____

Project: _____

eW Profile Powercore

3000 K, 19.25 in (489 mm)

Ultra-low-profile LED under-cabinet fixture for task and accent lighting

ENERGY STAR

LIGHTING SUPPLIER TO FURNISH FIXTURE LENGTHS AS REQUIRED.

eW Profile Powercore is a direct line voltage, under-cabinet LED fixture for common task lighting and display case applications. Available in 3000 K or 4000 K color temperatures, eW Profile Powercore is suitable for new installations and retrofits requiring superior illumination quality and dramatic energy savings. With an ultra-low-profile housing, three fixture lengths, versatile jumper options, and housing colors to match any environment, eW Profile Powercore offers an unprecedented level of design flexibility and ease of use.

- Onboard Powercore technology — eW Profile Powercore fixtures process power input directly from line voltage. Clip or track mounting options and standard line-neutral-ground wiring dramatically simplify installation.
- Exceptional illumination performance — Meets IESNA illumination specifications for optimal usability and safety in task lighting applications.
- Certified energy efficiency — Consumes just 5.5 W of energy per fixture and can support a continuous run up to 50 ft (15.2 m) in length. As an ENERGY STAR qualified LED luminaire (120 VAC only), eW Profile Powercore meets or exceeds strict energy efficiency guidelines.

For detailed product information, see the Product Guide at www.philipscolorkinetics.com/ls/essentialwhite/ewprofilep/

Specifications

Due to continuous improvements and innovations, specifications may change without notice.

Item	Specification	9.25 in (235 mm)	19.25 in (489 mm)	39.25 in (997 mm)
Output	Beam Angle	105° x 100°		
	Lumens†	220 (3000 K) 276 (4000 K)	450 (3000 K) 479 (4000 K)	862 (3000 K) 1079 (4000 K)
	Efficacy (lm / W)	36.8 (3000 K) 47.3 (4000 K)	44.1 (3000 K) 46.5 (4000 K)	42.3 (3000 K) 52.6 (4000 K)
	CRI	85 (3000 K) 81 (4000 K)	85 (3000 K) 87 (4000 K)	85 (3000 K) 81 (4000 K)
	Lumen Maintenance‡	48,000 hours L_{70} @ 25° C 37,000 hours L_{70} @ 50° C 50,000 hours L_{50} @ 25° C 50,000 hours L_{50} @ 50° C		
Electrical	Input Voltage	100 / 120 / 220 – 240 VAC, 50 / 60 Hz		
	Power Consumption	5.5 W max. at full output, steady state 6 W peak in-rush	10 W max. at full output, steady state 13 W peak in-rush	20 W max. at full output, steady state 25 W peak in-rush
	Power Factor	.99 @ 120 VAC (19.25 in fixture)		
Control	Dimmer	Compatible with many commercially available reverse-phase ELV-type dimmers§		
Physical	Dimensions *(Height x Length x Depth)*	.88 x 9.25 x 1.7 in (22 x 235 x 43 mm)	.88 x 19.25 x 1.7 in (22 x 489 x 43 mm)	.88 x 39.25 x 1.7 in (22 x 997 x 43 mm)
	Weight	7 oz (198 g)	13 oz (369 g)	1.6 lb (728 g)
	Housing	Extruded aluminium, polycarbonate. White, Black, or Gray powder-coated finish.		
	Lens	Polycarbonate		
	Fixture Connections	Integral male / female connectors		
	Temperature Ranges	-4° – 122° F (-20° – 50° C) Operating -4° – 122° F (-20° – 50° C) Startup -40° – 176° F (-40° – 80° C) Storage		
	Humidity	0 – 95%, non-condensing		
	Fixture Run Length	Up to 50 ft (15.3 m) of fixtures in a single run, ≤ 324 W		
Certification and Safety	Certification	UL / cUL, FCC Class B, CE, C-Tick, ENERGY STAR (120 VAC)		
	Environment	Dry / Damp Location, IP50		

* Color temperatures conform to nominal CCTs as defined in ANSI Chromaticity Standard C78.377A.

† Lumen measurement complies with IES LM-79-08 testing procedures.

‡ L_{70} = 70% lumen maintenance (when light output drops below 70% of initial output). L_{50} = 50% lumen maintenance (when light output drops below 50% of initial output). Ambient luminaire temperatures specified. Lumen maintenance calculations are based on lifetime prediction graphs supplied by LED source manufacturers. Calculations for white-light LED fixtures are based on measurements that comply with IES LM-80-08 testing procedures. Refer to www.philipscolorkinetics.com/support/appnotes/lm-80-08.pdf for more information.

§ See www.colorkinetics.com/support/appnotes/ for specific details.

PHILIPS

Fixtures

See Ordering Information Specification Sheet for additional fiixture lengths and housing colors.

Item	Color Temp.	Housing	Length	Item Number	Philips 12NC
eW Profile Powercore, 100 VAC *including Mounting Clips and End-to-End Connector*	3000 K	White	19.25 in (489 mm)	523-000026-43	910503702215
	4000 K	White	19.25 in (489 mm)	523-000026-46	910503702218
eW Profile Powercore, 120 VAC* *including Mounting Clips and End-to-End Connector*	3000 K	White	19.25 in (489 mm)	523-000027-73	910503704138
	4000 K	White	19.25 in (489 mm)	523-000027-76	910503704141
eW Profile Powercore, 220 – 240 VAC *including Mounting Clips and End-to-End Connector*	3000 K	White	19.25 in (489 mm)	523-000028-61	910503700641
	4000 K	White	19.25 in (489 mm)	523-000028-64	910503700644
eW Profile Powercore, 220 – 240 VAC *including Mounting Clips, Leader Cable, and Terminator*	3000 K	White	19.25 in (489 mm)	523-000028-79	910503700659
	4000 K	White	19.25 in (489 mm)	523-000028-82	910503700662

* ENERGY STAR

Use Item Number when ordering in North America.

Accessories

See Ordering Information Specification Sheet for additional housing colors.

Item	Housing	Size	Item Number	Philips 12NC
Leader Cable and Terminator, 100 / 220 – 240 VAC	White	10 ft (3 m)	108-000034-01	910503700259
Permanent Wiring Compartment and Terminator, 120 VAC†	White	1.125 x 1.75 x 3.5 in (29 x 45 x 89 mm) *(Height x Width x Depth)*	120-000065-00	910503700270
Switched Portable Leader Cable and Terminator, 120 VAC	White	10 ft (3 m)	108-000034-00	910503700258
Switched Permanent Wiring Compartment and Terminators, 120 VAC	White	.875 x 2 x 4.25 in (22 x 51 x 108 mm) *(Height x Width x Depth)*	120-000065-04	910503701022
End-to-End Connector, Quantity 5	White	.875 in (22 mm)	108-000035-10	910503700368
Jumper Cable, 100 / 220–240 VAC	White	6 in (152 mm)	108-000035-05	910503700265
		12 in (305 mm)	108-000035-06	910503700266
		18 in (457 mm)	108-000035-07	910503700267
		5 ft (1.5 m)	108-000035-08	910503700268
Jumper Cable, 120 VAC	White	6 in (152 mm)	108-000035-00	910503700260
		12 in (305 mm)	108-000035-01	910503700261
		18 in (457 mm)	108-000035-02	910503700262
		5 ft (1.5 m)	108-000035-03	910503700263
"Y" Jumper Cable and Terminator, 100 / 220 – 240 VAC	White	16.5 in (419 mm)	108-000035-09	910503700269
"Y" Jumper Cable and Terminator, 120 VAC	White	16.5 in (419 mm)	108-000035-04	910503700264
Mounting Track	White	25 @ 9 in (229 mm)	120-000064-02	910503700273
		25 @ 19 in (483 mm)	120-000064-00	910503700271
		24 @ 39 in (991 mm)	120-000064-01	910503700272

† Requires Jumper Cable for fixture connection

Use Item Number when ordering in North America.

Photometrics

eW Profile Powercore
3000 K, 19.25 in (489 mm)

Polar Candela Distribution

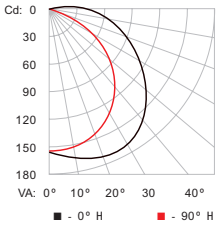

	0.0	45.0	90.0	135.0	180.0
0	155	155	155	155	155
5	161	161	153	150	149
15	169	165	147	133	127
25	171	163	135	111	101
35	166	154	117	85	74
45	152	137	93	59	48
55	132	114	67	36	27
65	106	86	41	18	13
75	80	58	19	7	5
85	51	34	4	1	1
90	37	24	0	0	0

Illuminance at Distance

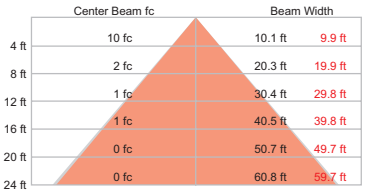

12.4 ft (3.8 m)
1 fc maximum distance

■ Vert. Spread: 103.4°
■ Horiz. Spread: 102.4°

For lux multiply fc by 10.7

Lumens	450
Efficacy	44.1 lm / W

Dimensions

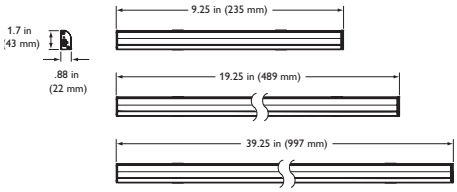

Jumper / Leader Cable

Terminator

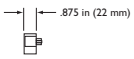

Jumper / Leader Cable

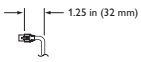

Switched Leader Cable

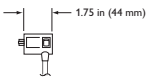

End-to-End Connector

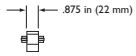

Philips Color Kinetics
3 Burlington Woods Drive
Burlington, Massachusetts 01803 USA
Tel 888.385.5742
Tel 617.423.9999
Fax 617.423.9998
www.philipscolorkinetics.com

Copyright © 2013 Philips Solid-State Lighting Solutions, Inc. All rights reserved.
Chromacore, Chromasic, CK, the CK logo, Color Kinetics, the Color Kinetics logo, ColorBlast, ColorBlaze, ColorBurst, eW Fuse, ColorGraze, ColorPlay, ColorReach, iW Reach, eW Reach, DIMand, EssentialWhite, eW, iColor, iColor Cove, IntelliWhite, iW, iPlayer, Optibin, and Powercore are either registered trademarks or trademarks of Philips Solid-State Lighting Solutions, Inc. in the United States and / or other countries. All other brand or product names are trademarks or registered trademarks of their respective owners. Due to continuous improvements and innovations, specifications may change without notice.

DAS-000005-09 R06 04-13

SPECIFICATION SHEET PAGE 1/2

T3450W

3 1/2" Series

Project
Notes
Fixture Type
Date

Low Profile Adjustable Wall Wash Trim

T3450W-11
(illustrated)

SPECIFICATIONS

TRIM	Powder coat painted or plated die-formed steel. Different finishes available. Painted finishes available with Marine Grade option.
LAMPS	**MR16** 20-50W **GU/GZ-10** 50W This product was designed for MR16 halogen lamps or GU/GZ-10. If you want to use the dimming option and you replace the MR16 or GU/GZ-10 lamp by an equivalent LED lamp, please see dimmer compatibility list on our Website.
REFLECTOR	**Standard: Anodized Aluminum** Available:

Anodized	**Specular**	**Painted**
Azure **(AZ)**	Black **(BK)**	White **(-01)**
Burnt Orange **(BO)**	Champagne **(CH)**	Black **(-02)**
Cobalt Blue **(CB)**	Clear **(CL)**	Matte White **(-11)**
Inca Gold **(IG)**		
Ruby **(RU)**		

CEILING CUTOUT	**Ø 3 5/8" (92 mm)**

COMPATIBLE HOUSINGS	**Remodel Housing**	**New Construction Housing**	**Insulated Housing**
	50W MR16 GU 5.3 IT3000LE IT3000LM	**50W MR16 GU 5.3** NW3000CE NW3000CM NW3000LE NW3000LM **50W GU/GZ-10** NW3000LT	**20W MR16 GU 5.3** ISMR3000E20 ISMR3000M20 **35W MR16 GU 5.3** ISMR3000E35 ISMR3000M35 **50W MR16 GU 5.3** ISMR3000M **50W GU/GZ-10** ISMR3000T

CERTIFICATION	cULus **E174023** for **damp locations**
WARRANTY	1 year for standard finishes, 2-year on "Marine Grade" finish.

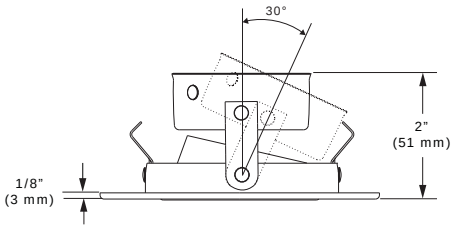

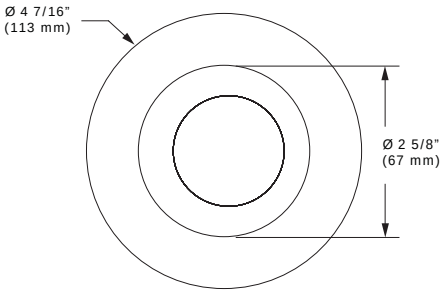

c UL us LISTED

MADE IN CANADA

CONTRAST LIGHTING

CONTRAST LIGHTING M. L. INC.
1009 RUE DU PARC-INDUSTRIEL
ST-JEAN-CHRYSOSTOME QC G6Z 1C5
CANADA

Tel: 1-888-839-4624
Fax: 1-877-839-7057
info@contrastlighting.com
www.contrastlighting.com

2014-04

SPECIFICATION SHEET PAGE 2/2

T3450W

3 1/2" Series

LIGHTING SUPPLIER TO FURNISH:
(1) HEXCELL LOUVER
(1) SPREAD LENS (SPREAD TBD)
(1) ROSCO DICHROIC COLOR FILTER
(COLOR TBD) - REFER TO "DICHRO" CUT

CODIFICATION EXAMPLE

T3450W-11BKMG

MODEL: T3450W
FINISH: 11
REFLECTOR: BK
MARINE GRADE OPTION: MG

LAMPING: (1) 12W MAXIMUM 2,700K LED MR16 REPLACEMENT LAMP - SPOT BEAM SPREAD - MINIMUM 400 LUMENS AND 5600 CBCP.

EXACT SPECIFICATION TO BE CONFIRMED AT TIME OF PURCHASE BASED ON CURRENT TECHNOLOGY AND MARKET AVAILABILITY.

LIGHTING SUPPLIER WILL NEED TO FURNISH SAMPLE OF FIXTURE WITH LAMP FOR REVIEW OF DIMMING AND COLOR TEMPERATURE BY OWNER, ARCHITECT, AND LIGHTING DESIGNER PRIOR TO FINALIZING SPECIFICATION.

ORDERING CODE

MODEL	TRIM FINISH		REFLECTOR		MARINE GRADE
T3450W					
T3450W	**-01**	White	**ANODIZED**		**MG** (optional)
	-02	Black	**...**	Aluminum (standard)	May be applied on finishes:
	-03	Gold Plated 24K	**AZ**	Azur	-01, -02, -05, -06, -11
	-04	Chrome	**BO**	Burnt Orange	and -15.
	-04BR	Brushed Chrome	**IG**	Inca Gold	
	-05	Architectural Bronze	**RU**	Ruby	
	-06	Antique Copper	**CB**	Cobalt Blue	
	-08	Antique Sliver			
	-11	Matte White	**SPECULAR**		
	-12BR	Brushed Nickel	**CL**	Clear	
	-13	Satin Nickel	**BK**	Black	
	-14	Almond	**CH**	Champagne	
	-15	Metallic Grey			
	-16	Satin Chrome	**PAINTED**		
			-01	White	
			-02	Black	
			-11	Matte White	

MARINE GRADE - Unless otherwise indicated, trims are for interior, cold and exterior locations where fixtures are not subject to direct rain or snow exposure as in soffits. MARINE GRADE treatment is recommended for exterior, shower and high salinity environment.

c UL us LISTED

MADE IN CANADA

CONTRAST LIGHTING

CONTRAST LIGHTING M. L. INC.
1009 RUE DU PARC-INDUSTRIEL
ST-JEAN-CHRYSOSTOME QC G6Z 1C5
CANADA

Tel: 1-888-839-4624
Fax: 1-877-839-7057
info@contrastlighting.com
www.contrastlighting.com

2014-04

SPECIFICATION SHEET

3 1/2" 3000 SERIES

NW3000CM

NW3000CM2
NW3000CM3

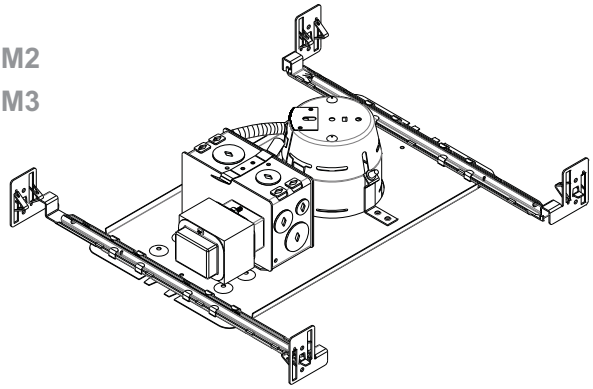

SHORT NEW CONSTRUCTION HOUSING WITH MAGNETIC TRANSFORMER

Damp Location	YES
MR16	MR16 50W MAX
Voltage	NW3000CM : 120 Volts (CAN & USA) NW3000CM2 : 277 Volts (USA) NW3000CM3 : 347 Volts (CANADA)
	Magnetic Transformer: EC50M 50 VA 120V / 12V EC50M2 50 VA 277V / 12V EC50M3 50 VA 347V / 12V
	Thermal Protector: T°C 130°C No 033
OD Cut	3 5/8" (92 mm)
LISTED	E174023
Dimensions	Overall Dimensions: Length: 13 1/2" (343 mm) | With bars: 15 3/8" (391 mm) Width: 7 3/8" (187 mm) | With bars: min 10" (254 mm) Height: 3 7/16" (94 mm)

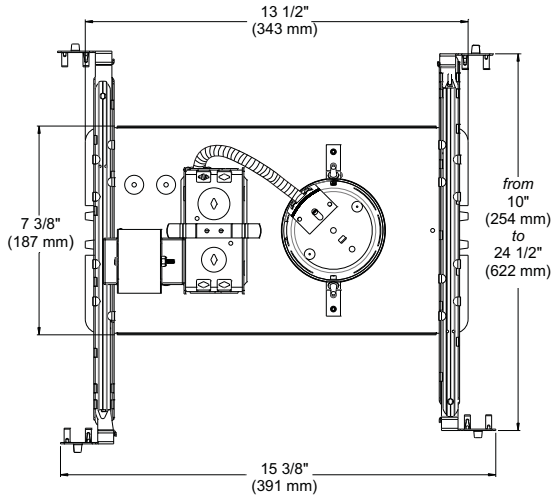

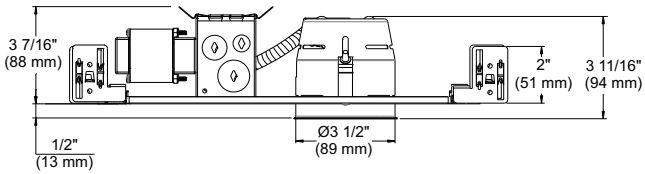

COMPATIBLE TRIMS

37W MR16			50W MR16		
R3152	S3151	T3145DG	R3151	T3145D ST	T3450D SM
R3171	S3400	T3152	R3151K	T3145W	T3450D ST
R3450D	S3400D	T3250DG	R3151W	T3165	T3450K
R3470	S3450	T3602	R3151WK	T3185	T3450W
R3470D	S3450D	T3652	R3601	T3200	T3450WK
R3602	S3500	T3671	R3601W	T3250	T3500
R3652	S3500D	T3700	R3651	T3260	T3500D SM
S3145	S3601	T3800	R3651W	T3300	T3500D ST
S3145D	S3651	T3850	T3000	T3400	T3500W
		T3900	T3100	T3400D SM	T3600
			T3125	T3400D ST	T3650
			T3145	T3400W	
			T3145D SM	T3450	

TECHNICAL SPECIFICATIONS

0.051"(1.3 mm) thickness galvanized steel
Below-ceiling accessible
Hooks: #CAN 2,088,648 and #USA 5,377,088 5,377,088
Installs on ceiling up to 7/8" thick
Perfect fit into ceiling
No light leakage

MADE IN CANADA

LISTED
Certified UL Standards

Your representative :_____

Your project :_____

CONTRAST LIGHTING INC.
1009, rue du Parc Industriel, Saint-Jean-Chrysostome QC G6Z 1C5, CANADA Tel: 1-888-839-4624 Fax: 1-877-839-7057
info@contrastlighting.com
www.contrastlighting.com

2012-11

LIGHTING SUPPLIER TO FURNISH:
(1) SPREAD LENS (SPREAD TBD)
(1) ROSCO DICHROIC COLOR FILTER
(COLOR TBD) - REFER TO "DICHRO" CUT

SPECIFICATION SHEET

3 1/2" 3000 SERIES

S3450D

LAMPING: (1) 12W MAXIMUM 2,700K LED MR16 REPLACEMENT LAMP - SPOT BEAM SPREAD - MINIMUM 400 LUMENS AND 5600 CBCP.

EXACT SPECIFICATION TO BE CONFIRMED AT TIME OF PURCHASE BASED ON CURRENT TECHNOLOGY AND MARKET AVAILABILITY.

LIGHTING SUPPLIER WILL NEED TO FURNISH SAMPLE OF FIXTURE WITH LAMP FOR REVIEW OF DIMMING AND COLOR TEMPERATURE BY OWNER, ARCHITECT, AND LIGHTING DESIGNER PRIOR TO FINALIZING SPECIFICATION.

LOW PROFILE ADJUSTABLE SHOWER TRIM WITH FROSTED LENS

Wet Location	**YES**
MR16	**20-50W**
GU/GZ-10	**YES***
Reflector	DOES NOT APPLY
	Insulated ceiling housing ISMR3000E20, ISMR3000M20, ISMR3000M, ISMR3000E35, ISMR3000M35
	New construction housing NW3000CE, NW3000CM, NW3000LE, NW3000LM NW3000LT*
	Remodel housing IT3000LE, IT3000LM
FC C F Lenses	**Standard : Frosted lens** Available : Clear lens (**C**), Frosted with clear center lens (**FC**). To order, place the lens code after the trim code. Ex. : S3450D**FC**-01

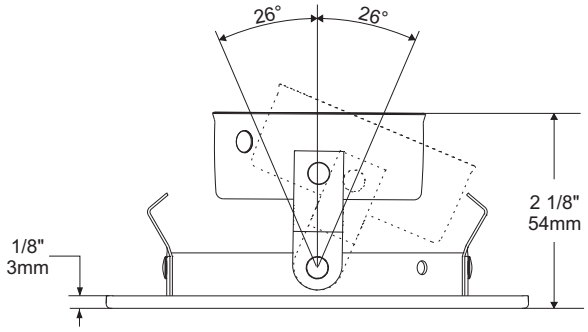

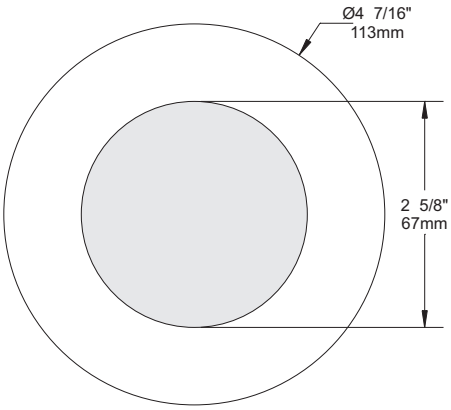

COMPATIBLE HOUSINGS

50W GU-GZ/10	50W MR16	37W MR16	35W MR16	20W MR16
NW3000LT*	IT3000LE IT3000LM NW3000LE NW3000LM	NW3000CE NW3000CM	ISMR3000M	ISMR3000E20 ISMR3000M20

TRIM FINISHES

-01 WHITE	**-04BR** BRUSHED CHROME	**-08** ANTIQUE SILVER
-02 BLACK	**-05** ARCHITECTURAL BRONZE	**-11** MATTE WHITE
-03 24K GOLD	**-06** ANTIQUE COPPER	**-12BR** BRUSHED NICKEL
-04 CHROME	**-07** ANTIQUE BRASS	**-13** SATIN NICKEL
		-14 ALMOND

Unless otherwise indicated, trims are for **interior use only**. For exterior use and up to wet conditions, **MARINE GRADE** treatment is **recommended.** Available for finishes -01, -02, -05, -06, -11 and -14 only.

c UL us LISTED
Certified UL Standards

Project _____

Representative _____

CONTRAST LIGHTING
1009, rue du Parc Industriel, Saint-Jean-Chrysostome, Qc, CAN G6Z 1C5 Tel.: 1-888-839-4624 Fax : 1-877-839-7057
info@contrastlighting.com
www.contrastlighting.com

MARCH 2010

SPECIFICATION SHEET

3 1/2" 3000 SERIES

NW3000CM

NW3000CM2
NW3000CM3

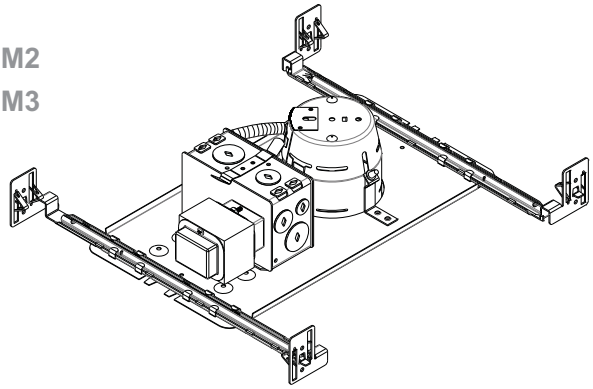

SHORT NEW CONSTRUCTION HOUSING WITH MAGNETIC TRANSFORMER

Damp Location	YES
MR16	MR16 50W MAX
Voltage	NW3000CM : 120 Volts (CAN & USA) NW3000CM2 : 277 Volts (USA) NW3000CM3 : 347 Volts (CANADA)
	Magnetic Transformer: EC50M 50 VA 120V / 12V EC50M2 50 VA 277V / 12V EC50M3 50 VA 347V / 12V
	Thermal Protector: T°C 130°C No 033
OD Cut	3 5/8" (92 mm)
LISTED	E174023
Dimensions	Overall Dimensions: Length: 13 1/2" (343 mm) | With bars: 15 3/8" (391 mm) Width: 7 3/8" (187 mm) | With bars: min 10" (254 mm) Height: 3 7/16" (94 mm)

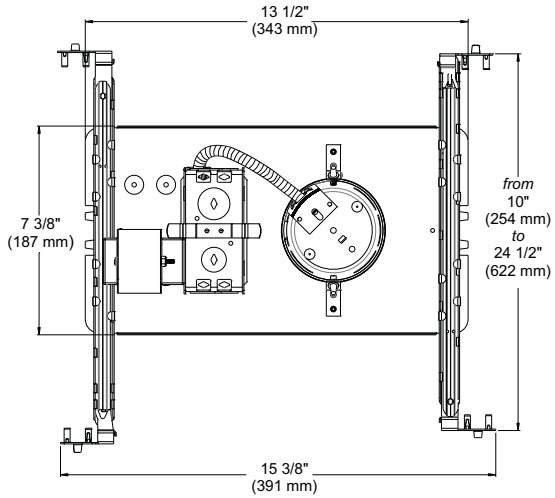

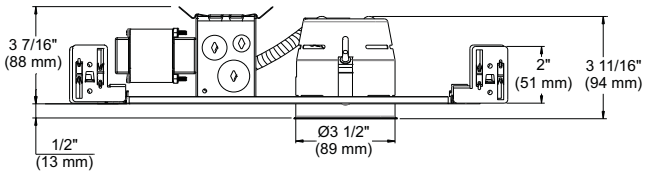

COMPATIBLE TRIMS

37W MR16			50W MR16		
R3152	S3151	T3145DG	R3151	T3145D ST	T3450D SM
R3171	S3400	T3152	R3151K	T3145W	T3450D ST
R3450D	S3400D	T3250DG	R3151W	T3165	T3450K
R3470	S3450	T3602	R3151WK	T3185	T3450W
R3470D	S3450D	T3652	R3601	T3200	T3450WK
R3602	S3500	T3671	R3601W	T3250	T3500
R3652	S3500D	T3700	R3651	T3260	T3500D SM
S3145	S3601	T3800	R3651W	T3300	T3500D ST
S3145D	S3651	T3850	T3000	T3400	T3500W
		T3900	T3100	T3400D SM	T3600
			T3125	T3400D ST	T3650
			T3145	T3400W	
			T3145D SM	T3450	

TECHNICAL SPECIFICATIONS

0.051"(1.3 mm) thickness galvanized steel
Below-ceiling accessible
Hooks: #CAN 2,088,648 and #USA 5,377,088 5,377,088
Installs on ceiling up to 7/8" thick
Perfect fit into ceiling
No light leakage

MADE IN CANADA

LISTED
Certified UL Standards

Your representative :_____

Your project :_____

CONTRAST LIGHTING
1009, rue du Parc Industriel, Saint-Jean-Chrysostome QC G6Z 1C5, CANADA Tel: 1-888-839-4624 Fax: 1-877-839-7057
info@contrastlighting.com
www.contrastlighting.com

2012-11

SPECIFICATION SHEET PAGE 1/2

T3450

3 1/2" Series

Project
Notes
Fixture Type
Date

Low Profile Regressed Trim

T3450-12BR
(illustrated)

SPECIFICATIONS

TRIM	Powder coat painted or plated die-formed steel. Different finishes available. Painted finishes available with Marine Grade option.
LAMPS	**MR16** 20-50W **GU/GZ-10** 50W **GX10** 20W HID (High Intensity Discharge) This product was designed for MR16 halogen lamps or GU/GZ-10. If you want to use the dimming option and you replace the MR16 or GU/GZ-10 lamp by an equivalent LED lamp, please see dimmer compatibility list on our Website.
REFLECTOR	**Standard: Anodized Aluminum** Available: **Anodized**: Azure **(AZ)**, Burnt Orange **(BO)**, Cobalt Blue **(CB)**, Inca Gold **(IG)**, Ruby **(RU)** **Specular**: Black **(BK)**, Champagne **(CH)**, Clear **(CL)** **Painted**: White **(-01)**, Black **(-02)**, Matte White **(-11)**
CEILING CUTOUT	**Ø 3 5/8" (92 mm)**
COMPATIBLE HOUSINGS	**Remodel Housing**: **50W MR16 GU 5.3** IT3000E IT3000M IT3000LE IT3000LM **50W GU/GZ-10** IT3000LT **20W GX10 (HID)** MH3000GX120 **New Construction Housing**: **50W MR16 GU 5.3** NW3000CE NW3000CM NW3000LE NW3000LM NWD3000LE NWT3000LE **50W GU/GZ-10** NW3000LT **Insulated Housing**: **20W MR16 GU 5.3** ISMR3000E20 ISMR3000M20 **35W MR16 GU 5.3** ISMR3000E35 ISMR3000M35 **50W MR16 GU 5.3** ISMR3000M **50W GU/GZ-10** ISMR3000T
CERTIFICATION	cULus **E174023** for **damp locations**
WARRANTY	1 year for standard finishes, 2-year on "Marine Grade" finish

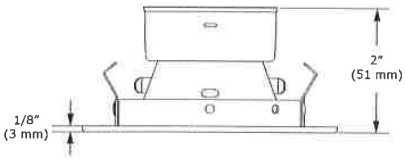

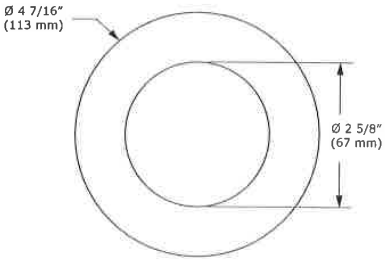

c UL us LISTED

MADE IN CANADA

CONTRAST LIGHTING

CONTRAST LIGHTING M. L. INC.
1009 RUE DU PARC-INDUSTRIEL
ST-JEAN-CHRYSOSTOME QC G6Z 1C5
CANADA

Tel: 1-888-839-4624
Fax: 1-877-839-7057
info@contrastlighting.com
www.contrastlighting.com

2014-04

SPECIFICATION SHEET PAGE 2/2

T3450

3 1/2" Series

LIGHTING SUPPLIER TO FURNISH:
(1) HEXCELL LOUVER
(1) SPREAD LENS (SPREAD TBD)
(1) ROSCO DICHROIC COLOR FILTER
(COLOR TBD) - REFER TO "DICHRO" CUT

LAMPING: (1) 12W MAXIMUM 2,700K LED MR16 REPLACEMENT LAMP - SPOT BEAM SPREAD - MINIMUM 400 LUMENS AND 5600 CBCP.

EXACT SPECIFICATION TO BE CONFIRMED AT TIME OF PURCHASE BASED ON CURRENT TECHNOLOGY AND MARKET AVAILABILITY.

LIGHTING SUPPLIER WILL NEED TO FURNISH SAMPLE OF FIXTURE WITH LAMP FOR REVIEW OF DIMMING AND COLOR TEMPERATURE BY OWNER, ARCHITECT, AND LIGHTING DESIGNER PRIOR TO FINALIZING SPECIFICATION.

CODIFICATION EXAMPLE

T3450-11BKMG

MODEL — FINISH — REFLECTOR — MARINE GRADE OPTION

ORDERING CODE

MODEL	TRIM FINISH		REFLECTOR		MARINE GRADE
T3450					
T3450	**-01**	White	**ANODIZED**		**MG** (optional)
	-02	Black	**...**	Aluminum (standard)	May be applied on finishes:
	-03	Gold Plated 24K	**AZ**	Azur	-01, -02, -05, -06, -11
	-04	Chrome	**BO**	Burnt Orange	and -15.
	-04BR	Brushed Chrome	**IG**	Inca Gold	
	-05	Architectural Bronze	**RU**	Ruby	
	-06	Antique Copper	**CB**	Cobalt Blue	
	-08	Antique Sliver			
	-11	Matte White	**SPECULAR**		
	-12BR	Brushed Nickel	**CL**	Clear	
	-13	Satin Nickel	**BK**	Black	
	-14	Almond	**CH**	Champagne	
	-15	Metallic Grey			
	-16	Satin Chrome	**PAINTED**		
			-01	White	
			-02	Black	
			-11	Matte White	

MARINE GRADE - Unless otherwise indicated, trims are for interior, cold and exterior locations where fixtures are not subject to direct rain or snow exposure as in soffits. MARINE GRADE treatment is recommended for exterior, shower and high salinity environment.

c UL us LISTED

MADE IN CANADA

CONTRAST LIGHTING

CONTRAST LIGHTING M. L. INC.
1009 RUE DU PARC-INDUSTRIEL
ST-JEAN-CHRYSOSTOME QC G6Z 1C5
CANADA

Tel: 1-888-839-4624
Fax: 1-877-839-7057
info@contrastlighting.com
www.contrastlighting.com

2014-04

SPECIFICATION SHEET

3 1/2" 3000 SERIES

NW3000CM

NW3000CM2
NW3000CM3

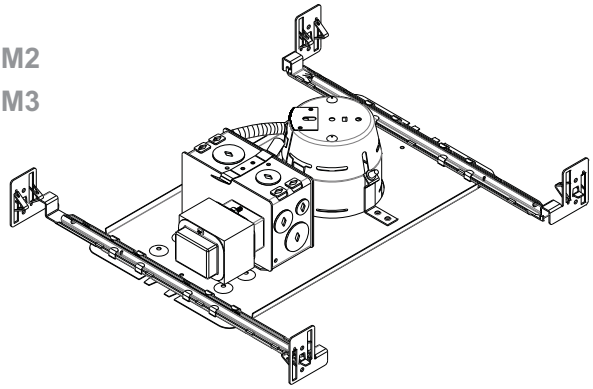

SHORT NEW CONSTRUCTION HOUSING WITH MAGNETIC TRANSFORMER

Damp Location	YES
MR16	MR16 50W MAX
Voltage	NW3000CM : 120 Volts (CAN & USA) NW3000CM2 : 277 Volts (USA) NW3000CM3 : 347 Volts (CANADA)
	Magnetic Transformer: EC50M 50 VA 120V / 12V EC50M2 50 VA 277V / 12V EC50M3 50 VA 347V / 12V
	Thermal Protector: T°C 130°C No 033
OD Cut	3 5/8" (92 mm)
LISTED	E174023
Dimensions	Overall Dimensions: Length: 13 1/2" (343 mm) | With bars: 15 3/8" (391 mm) Width: 7 3/8" (187 mm) | With bars: min 10" (254 mm) Height: 3 7/16" (94 mm)

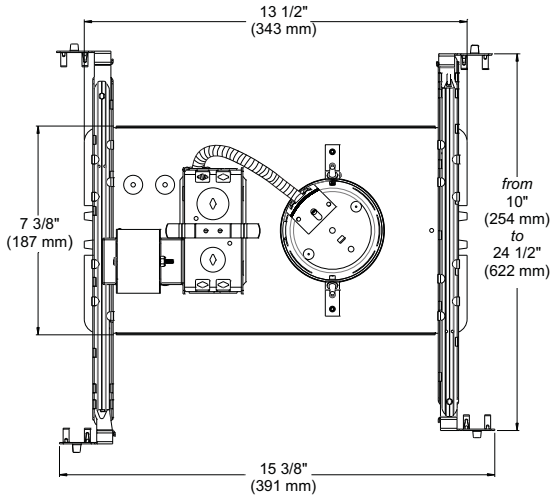

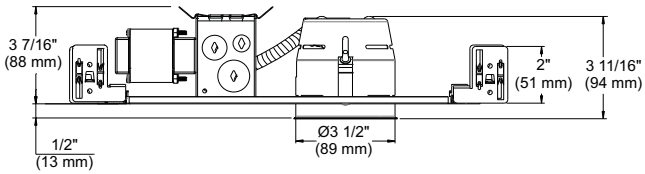

COMPATIBLE TRIMS

37W MR16			50W MR16		
R3152	S3151	T3145DG	R3151	T3145D ST	T3450D SM
R3171	S3400	T3152	R3151K	T3145W	T3450D ST
R3450D	S3400D	T3250DG	R3151W	T3165	T3450K
R3470	S3450	T3602	R3151WK	T3185	T3450W
R3470D	S3450D	T3652	R3601	T3200	T3450WK
R3602	S3500	T3671	R3601W	T3250	T3500
R3652	S3500D	T3700	R3651	T3260	T3500D SM
S3145	S3601	T3800	R3651W	T3300	T3500D ST
S3145D	S3651	T3850	T3000	T3400	T3500W
		T3900	T3100	T3400D SM	T3600
			T3125	T3400D ST	T3650
			T3145	T3400W	
			T3145D SM	T3450	

TECHNICAL SPECIFICATIONS

0.051"(1.3 mm) thickness galvanized steel
Below-ceiling accessible
Hooks: #CAN 2,088,648 and #USA 5,377,088 5,377,088
Installs on ceiling up to 7/8" thick
Perfect fit into ceiling
No light leakage

MADE IN CANADA

LISTED
Certified UL Standards

Your representative :_____

Your project :_____

CONTRAST LIGHTING INC.
1009, rue du Parc Industriel, Saint-Jean-Chrysostome QC G6Z 1C5, CANADA Tel: 1-888-839-4624 Fax: 1-877-839-7057
info@contrastlighting.com
www.contrastlighting.com

2012-11

LIGHTING SUPPLIER TO FURNISH:
(1) SPREAD LENS (SPREAD TBD)
(1) ROSCO DICHROIC COLOR FILTER
(COLOR TBD) - REFER TO "DICHRO" CUT

SPECIFICATION SHEET

3 1/2" 3000 SERIES

S3450

LAMPING: (1) 12W MAXIMUM 2,700K LED MR16 REPLACEMENT LAMP - SPOT BEAM SPREAD - MINIMUM 400 LUMENS AND 5600 CBCP.

EXACT SPECIFICATION TO BE CONFIRMED AT TIME OF PURCHASE BASED ON CURRENT TECHNOLOGY AND MARKET AVAILABILITY.

LIGHTING SUPPLIER WILL NEED TO FURNISH SAMPLE OF FIXTURE WITH LAMP FOR REVIEW OF DIMMING AND COLOR TEMPERATURE BY OWNER, ARCHITECT, AND LIGHTING DESIGNER PRIOR TO FINALIZING SPECIFICATION.

LOW PROFILE SHOWER TRIM WITH FROSTED LENS

Wet Location	**YES**
MR16	**20-50W**
GU/GZ-10	**YES***
Reflector	**Standard : Anodized aluminum** Available : **Anodized**: Azur (**AZ**), Burnt orange (**BO**), Cobalt blue (**CB**), Inca Gold (**IG**), Ruby (**RU**) **Specular**: Black (**BK**), Champagne (**CH**), Clear (**CL**) **Painted**: White (**-01**), Black (**-02**), Matte White (**-11**) To order a white trim with the standard reflector : **S3450-01** To order a white trim with an Azur smooth reflector : **S3450-01AZ** Order your trim with a clear lens to see the reflector's color.
	Insulated ceiling housing ISMR3000E20, ISMR3000E35, ISMR3000M, ISMR3000M20, ISMR3000M35
	New construction housing NW3000CE, NW3000CM, NW3000LE,NW3000LM, NW3000LT*
	Remodel housing IT3000LE, IT3000LM, IT3000LT*
FC C F Lenses	**Standard : Frosted lens** Available : Clear lens (**C**), Frosted with clear center lens (**FC**). To order, place the lens code after the trim code. Ex. : S3450**FC**-01

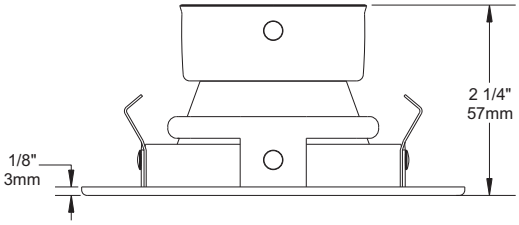

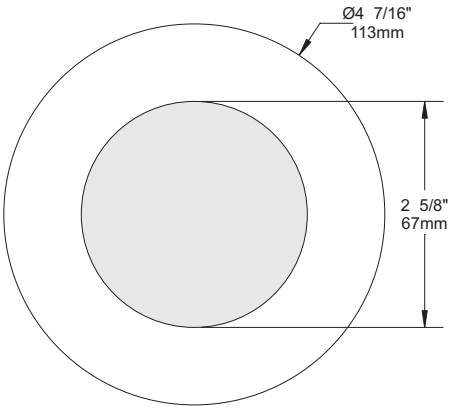

COMPATIBLE HOUSINGS

50W GU-GZ/10	50W MR16	37W MR16	35W MR16	20W MR16
IT3000LT*	IT3000LE	NW3000CE	ISMR3000E35	ISMR3000E20
NW3000LT*	IT3000LM	NW3000CM	ISMR3000M	ISMR3000M20
	NW3000LE		ISMR3000M35	
	NW3000LM			

TRIM FINISHES

-01 WHITE
-02 BLACK
-03 24K GOLD
-04 CHROME
-04BR BRUSHED CHROME
-05 ARCHITECTURAL BRONZE
-06 ANTIQUE COPPER
-07 ANTIQUE BRASS
-08 ANTIQUE SILVER
-11 MATTE WHITE
-12BR BRUSHED NICKEL
-13 SATIN NICKEL
-14 ALMOND

Unless otherwise indicated, trims are for **interior use only**. For exterior use and up to wet conditions, **MARINE GRADE** treatment is **recommended.** Available for finishes -01, -02, -05, -06, -11 and -14 only.

c UL us LISTED
Certified UL Standards

Project _____

Representative _____

CONTRAST LIGHTING
1009, rue du Parc Industriel, Saint-Jean-Chrysostome, Qc, CAN G6Z 1C5 Tel.: 1-888-839-4624 Fax : 1-877-839-7057
info@contrastlighting.com
www.contrastlighting.com

MARCH 2010

SPECIFICATION SHEET

3 1/2" 3000 SERIES

NW3000CM

NW3000CM2
NW3000CM3

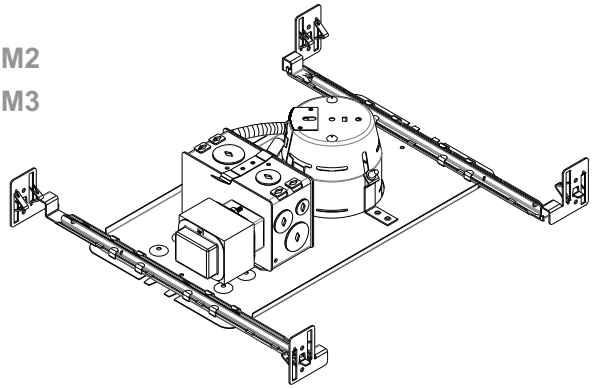

SHORT NEW CONSTRUCTION HOUSING WITH MAGNETIC TRANSFORMER

Damp Location	YES
MR16	MR16 50W MAX
Voltage	NW3000CM : 120 Volts (CAN & USA) NW3000CM2 : 277 Volts (USA) NW3000CM3 : 347 Volts (CANADA)
	Magnetic Transformer: EC50M 50 VA 120V / 12V EC50M2 50 VA 277V / 12V EC50M3 50 VA 347V / 12V
	Thermal Protector: T°C 130°C No 033
OD Cut	3 5/8" (92 mm)
LISTED	E174023
Dimensions	Overall Dimensions: Length: 13 1/2" (343 mm) | With bars: 15 3/8" (391 mm) Width: 7 3/8" (187 mm) | With bars: min 10" (254 mm) Height: 3 7/16" (94 mm)

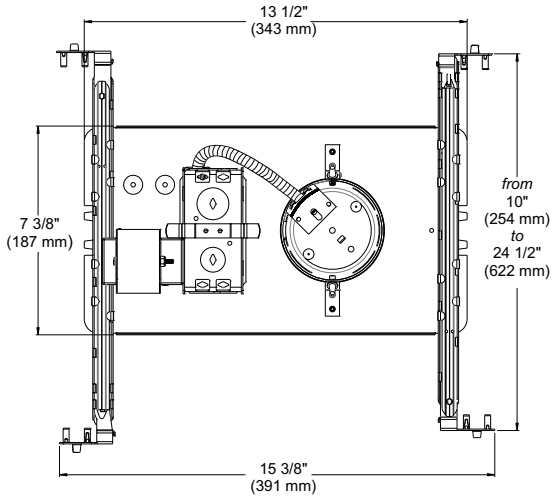

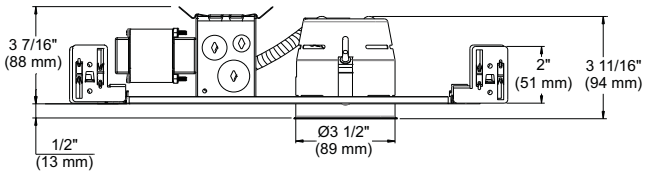

COMPATIBLE TRIMS

37W MR16			50W MR16		
R3152	S3151	T3145DG	R3151	T3145D ST	T3450D SM
R3171	S3400	T3152	R3151K	T3145W	T3450D ST
R3450D	S3400D	T3250DG	R3151W	T3165	T3450K
R3470	S3450	T3602	R3151WK	T3185	T3450W
R3470D	S3450D	T3652	R3601	T3200	T3450WK
R3602	S3500	T3671	R3601W	T3250	T3500
R3652	S3500D	T3700	R3651	T3260	T3500D SM
S3145	S3601	T3800	R3651W	T3300	T3500D ST
S3145D	S3651	T3850	T3000	T3400	T3500W
		T3900	T3100	T3400D SM	T3600
			T3125	T3400D ST	T3650
			T3145	T3400W	
			T3145D SM	T3450	

TECHNICAL SPECIFICATIONS

0.051"(1.3 mm) thickness galvanized steel
Below-ceiling accessible
Hooks: #CAN 2,088,648 and #USA 5,377,088 5,377,088
Installs on ceiling up to 7/8" thick
Perfect fit into ceiling
No light leakage

MADE IN CANADA

LISTED
Certified UL Standards

Your representative :_____

Your project :_____

CONTRAST LIGHTING INC.
1009, rue du Parc Industriel, Saint-Jean-Chrysostome QC G6Z 1C5, CANADA Tel: 1-888-839-4624 Fax: 1-877-839-7057
info@contrastlighting.com
www.contrastlighting.com

2012-11

LIGHTING SUPPLIER TO FURNISH:
(1) SPREAD LENS (SPREAD TBD)
(1) ROSCO DICHROIC COLOR FILTER
(COLOR TBD) - REFER TO "DICHRO" CUT

SPECIFICATION SHEET

LAMPING: (1) 12W MAXIMUM 2,700K LED MR16 REPLACEMENT LAMP - SPOT BEAM SPREAD - MINIMUM 400 LUMENS AND 5600 CBCP.

EXACT SPECIFICATION TO BE CONFIRMED AT TIME OF PURCHASE BASED ON CURRENT TECHNOLOGY AND MARKET AVAILABILITY.

LIGHTING SUPPLIER WILL NEED TO FURNISH SAMPLE OF FIXTURE WITH LAMP FOR REVIEW OF DIMMING AND COLOR TEMPERATURE BY OWNER, ARCHITECT, AND LIGHTING DESIGNER PRIOR TO FINALIZING SPECIFICATION.

3 1/2" 3000 SERIES

S3450

LOW PROFILE SHOWER TRIM WITH FROSTED LENS

Wet Location	**YES**
MR16	**20-50W**
GU/GZ-10	**YES***
Reflector	**Standard : Anodized aluminum** Available : **Anodized**: Azur (**AZ**), Burnt orange (**BO**), Cobalt blue (**CB**), Inca Gold (**IG**), Ruby (**RU**) **Specular**: Black (**BK**), Champagne (**CH**), Clear (**CL**) **Painted**: White (**-01**), Black (**-02**), Matte White (**-11**) To order a white trim with the standard reflector : **S3450-01** To order a white trim with an Azur smooth reflector : **S3450-01AZ** Order your trim with a clear lens to see the reflector's color.
	Insulated ceiling housing ISMR3000E20, ISMR3000E35, ISMR3000M, ISMR3000M20, ISMR3000M35
	New construction housing NW3000CE, NW3000CM, NW3000LE,NW3000LM, NW3000LT*
	Remodel housing IT3000LE, IT3000LM, IT3000LT*
FC C F Lenses	**Standard : Frosted lens** Available : Clear lens (**C**), Frosted with clear center lens (**FC**). To order, place the lens code after the trim code. Ex. : S3450**FC**-01

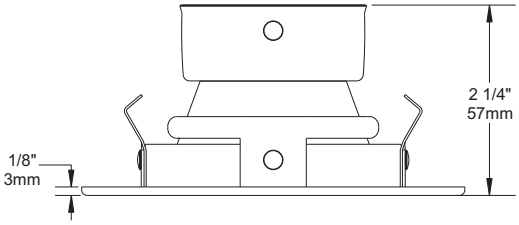

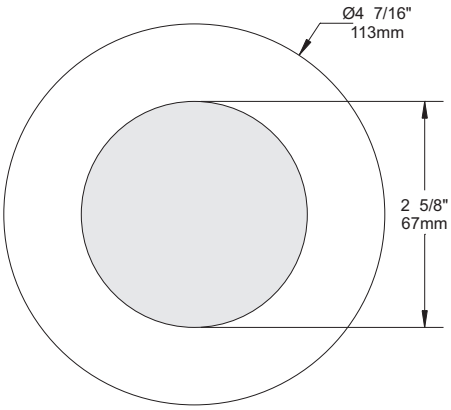

COMPATIBLE HOUSINGS

50W GU-GZ/10	50W MR16	37W MR16	35W MR16	20W MR16
IT3000LT*	IT3000LE	NW3000CE	ISMR3000E35	ISMR3000E20
NW3000LT*	IT3000LM	NW3000CM	ISMR3000M	ISMR3000M20
	NW3000LE		ISMR3000M35	
	NW3000LM			

TRIM FINISHES

-01 WHITE
-02 BLACK
-03 24K GOLD
-04 CHROME
-04BR BRUSHED CHROME
-05 ARCHITECTURAL BRONZE
-06 ANTIQUE COPPER
-07 ANTIQUE BRASS
-08 ANTIQUE SILVER
-11 MATTE WHITE
-12BR BRUSHED NICKEL
-13 SATIN NICKEL
-14 ALMOND

Unless otherwise indicated, trims are for **interior use only**. For exterior use and up to wet conditions, **MARINE GRADE** treatment is **recommended.** Available for finishes -01, -02, -05, -06, -11 and -14 only.

c UL us LISTED
Certified UL Standards

Project _____

Representative _____

CONTRAST LIGHTING
1009, rue du Parc Industriel, Saint-Jean-Chrysostome, Qc, CAN G6Z 1C5 Tel.: 1-888-839-4624 Fax : 1-877-839-7057
info@contrastlighting.com
www.contrastlighting.com

MARCH 2010

SPECIFICATION SHEET

3 1/2" 3000 SERIES

NW3000CM

NW3000CM2
NW3000CM3

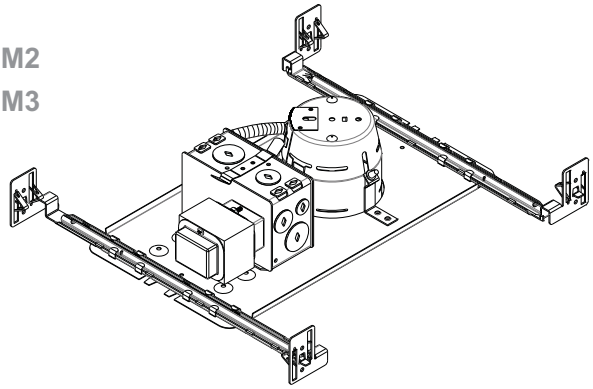

SHORT NEW CONSTRUCTION HOUSING WITH MAGNETIC TRANSFORMER

Damp Location	YES
MR16	MR16 50W MAX
Voltage	NW3000CM : 120 Volts (CAN & USA) NW3000CM2 : 277 Volts (USA) NW3000CM3 : 347 Volts (CANADA)
	Magnetic Transformer: EC50M 50 VA 120V / 12V EC50M2 50 VA 277V / 12V EC50M3 50 VA 347V / 12V
	Thermal Protector: T°C 130°C No 033
OD Cut	3 5/8" (92 mm)
LISTED	E174023
Dimensions	Overall Dimensions: Length: 13 1/2" (343 mm) | With bars: 15 3/8" (391 mm) Width: 7 3/8" (187 mm) | With bars: min 10" (254 mm) Height: 3 7/16" (94 mm)

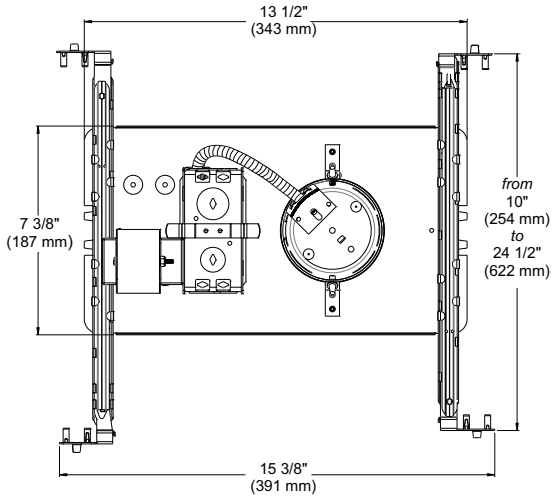

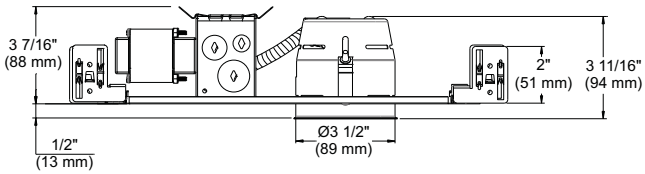

COMPATIBLE TRIMS

37W MR16			50W MR16		
R3152	S3151	T3145DG	R3151	T3145D ST	T3450D SM
R3171	S3400	T3152	R3151K	T3145W	T3450D ST
R3450D	S3400D	T3250DG	R3151W	T3165	T3450K
R3470	S3450	T3602	R3151WK	T3185	T3450W
R3470D	S3450D	T3652	R3601	T3200	T3450WK
R3602	S3500	T3671	R3601W	T3250	T3500
R3652	S3500D	T3700	R3651	T3260	T3500D SM
S3145	S3601	T3800	R3651W	T3300	T3500D ST
S3145D	S3651	T3850	T3000	T3400	T3500W
		T3900	T3100	T3400D SM	T3600
			T3125	T3400D ST	T3650
			T3145	T3400W	
			T3145D SM	T3450	

TECHNICAL SPECIFICATIONS

0.051"(1.3 mm) thickness galvanized steel
Below-ceiling accessible
Hooks: #CAN 2,088,648 and #USA 5,377,088 5,377,088
Installs on ceiling up to 7/8" thick
Perfect fit into ceiling
No light leakage

MADE IN CANADA

LISTED
Certified UL Standards

Your representative :_____

Your project :_____

CONTRAST LIGHTING INC.
1009, rue du Parc Industriel, Saint-Jean-Chrysostome QC G6Z 1C5, CANADA Tel: 1-888-839-4624 Fax: 1-877-839-7057
info@contrastlighting.com
www.contrastlighting.com

2012-11

Skydome™

LED

FOCAL POINT®

DIMENSIONAL DATA

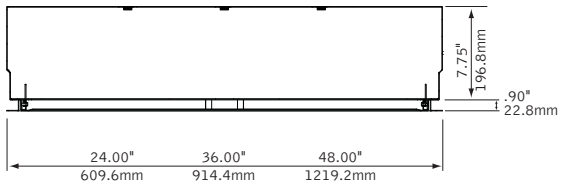

led options

2' diameter

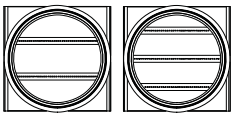

LL1 LL2

3' diameter

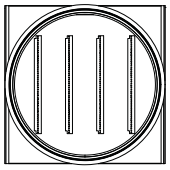

LL1 & LL2

4' diameter

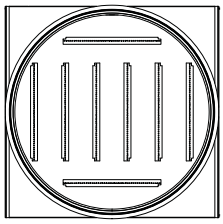

LL1 & LL2

FEATURES

2', 3' and 4' diameter recessed direct LED with lens.

Frosted acrylic diffuser provides high transmission and uniform distribution.

Universal ceiling trim rings are suitable for both grid & drywall applications.

Skydome™ is an excellent choice for open public spaces such as concourses, lobbies, reception areas and meeting rooms.

PERFORMANCE

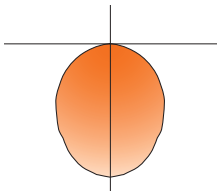

4' Diameter,
Standard Output

Delivered Lumens: 11560lm

Total System Watts: 140.3W

PRODUCT OVERVIEW

Lumen Output:	2184-13930lm
Wattage:	46-175W
LPW:	47-82
SDCM:	3
Lumen Maintenance:	L70 @ 50,000hrs

Photometric performance is measured in accordance with IESNA LM-79.
Visit focalpointlights.com for complete photometric data.

fixture: project:

MOUNTING INFORMATION

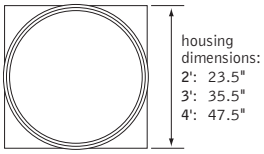

square housing installs easily into grid ceiling.

Luminaire must be installed prior to drywall ceiling.

SPECIFICATIONS

LED System

Proprietary linear LED module incorporates premium LEDs on a robust platform to achieve excellent thermal management. LEDs are placed to promote a uniform appearance. Available in 3000K, 3500K or 4000K with CRI>80. 0-10V dimming driver standard. LED modules and drivers are replaceable from below.

Construction

Two-piece 20 Ga. steel reflector and housing. Spun steel trim ring and doorframe. Bottom access 20 Ga. steel driver compartment. 2' unit weight: 24 lbs., 3' unit weight: 44 lbs., 4' unit weight: 58 lbs.

Optic

One-piece 20 Ga. steel reflector finished in High Reflectance White powder coat. .125" frosted acrylic diffuser is held by one-piece spun steel doorframe and secured to the housing by torsion springs. Flat frosted Lens.

Electrical

Standard 120-277V driver includes 0-10V analog dimming. Power factor > .9. Optional EcoSystem™ drivers from Lutron available. Emergency battery: Bodine BSL310–CAN. Emergency output—10 watts for 90 minutes.

Labels

UL and cUL listed. Suitable for Dry or Damp Locations, indoor use only.

Finish

Polyester powder coat applied over a 5-stage pre–treatment.

Lumen Maintenance

L70 at 50,000 hours.

Warranty

LED system rated for operation in ambient environments up to 25°C. 5 year limited warranty.

PERFORMANCE CHART

Size	LED System	Color Temp	Tested System Watts	Delivered Lumens
2'	Standard output	3500K	45.9	2184
	Medium output	3500K	66.3	3149
3'	Standard output	3500K	70.1	4858
	Medium output	3500K	87.8	5774
4'	Standard output	3500K	140.3	11560
	Medium output	3500K	175.4	13930

*Lumen output may vary +/- 5%. Actual wattage may vary +/- 5%

ORDERING

Luminaire Series		**FSDL**
Skydome LED	FSDL	
Nominal Size		
2' Diameter	22	
3' Diameter	33	
4' Diameter	44	
Shielding		**FLXP**
Flat Frosted Diffuser	FLXP	
LED System		
Standard Output	LL1	
Medium Output	LL2	
Color Temperature		
3000K	30K	
3500K	35K	
4000K	40K	
Circuit		**1C**
Single Circuit	1C	
Voltage		
120 Volt	120	
277 Volt	277	
UNV Volt	UNV	
(Cannot be specified with EM option)		
Driver		
0-10V Dimming	LD1	
Lutron A-Series - EcoSystem	L3D	
Mounting		**U**
Universal	U	
Factory Options		
Chicago Plenum	CP	
Emergency Battery*	EM	
Flex Whip*	FW	
Finish		**WH**
Matte Satin White	WH	

*For more information visit focalpointlights.com/reference or consult factory.

Focal Point LLC reserves the right to change specifications for product improvement without notification.

Skydome™

LED - 4' RECESSED

FSDL-44-D-LL1-L35-LD1-120-U-FL-WH

Filename:	FSDL44DLL1L35LD1.IES	Lumens:	11560lm
Test #:	17502.0	System Watts:	140.3W
		LPW:	82

CANDELPOWER DISTRIBUTION

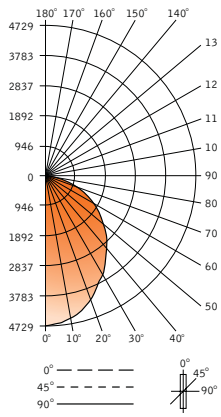

Vertical Angle	Horizontal Angle 0°	22.5°	45°	67.5°	90°	Zonal Lumens
0°	4729	4729	4729	4729	4729	
5°	4675	4668	4668	4666	4666	446
15°	4390	4390	4388	4388	4388	1244
25°	3831	3828	3831	3821	3812	1771
35°	3276	3271	3262	3253	3246	2049
45°	2710	2707	2693	2682	2665	2085
55°	2027	2016	2017	2003	1996	1806
65°	1339	1339	1339	1329	1322	1324
75°	648	651	644	644	644	683
85°	140	140	140	140	136	153
90°	0	0	0	0	0	
95°	0	0	0	0	0	0
105°	0	0	0	0	0	0
115°	0	0	0	0	0	0
125°	0	0	0	0	0	0
135°	0	0	0	0	0	0
145°	0	0	0	0	0	0
155°	0	0	0	0	0	0
165°	0	0	0	0	0	0
175°	0	0	0	0	0	0
180°	0	0	0	0	0	

LUMEN SUMMARY

	Zone	Lumens	% Fixture
	0-30°	3460	29.9
	0-40°	5509	47.7
	0-60°	9400	81.3
	0-90°	11560	100.0
Total Luminaire	0-180°	**11560**	**100.0**

LUMINANCE DATA (CD/M²)

Vertical Angle	0°	45°	90°
45°	3944	3920	3879
55°	3636	3619	3581
65°	3259	3259	3219
75°	2577	2559	2559
85°	1658	1658	1602

Go to www.focalpointlights.com for additional photometric data.

Skydome™

LED - 4' RECESSED

FSDL-44-D-LL2-L35-LD1-120-U-FL-WH

Filename:	FSDL44DLL2L35LD1.IES	Lumens:	13930lm
Test #:	17503.0	System Watts:	175.4W
		LPW:	79

CANDELPOWER DISTRIBUTION

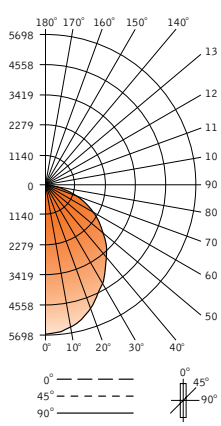

Vertical Angle	Horizontal Angle 0°	22.5°	45°	67.5°	90°	Zonal Lumens
0°	5698	5698	5698	5698	5698	
5°	5634	5625	565	5622	5622	537
15°	5290	5290	5287	5287	5287	1499
25°	4616	4613	4616	4604	4593	2134
35°	3947	3942	3931	3919	3911	2469
45°	3265	3262	3245	3231	3212	2513
55°	2442	2433	2431	2414	2405	2176
65°	1613	1613	1613	1602	1593	1596
75°	781	784	775	775	775	823
85°	169	169	169	169	164	184
90°	0	0	0	0	0	
95°	0	0	0	0	0	0
105°	0	0	0	0	0	0
115°	0	0	0	0	0	0
125°	0	0	0	0	0	0
135°	0	0	0	0	0	0
145°	0	0	0	0	0	0
155°	0	0	0	0	0	0
165°	0	0	0	0	0	0
175°	0	0	0	0	0	0
180°	0	0	0	0	0	

LUMEN SUMMARY

	Zone	Lumens	% Fixture
	0-30°	4169	29.9
	0-40°	6638	47.7
	0-60°	11327	81.3
	0-90°	13930	100.0
Total Luminaire	0-180°	**13930**	**100.0**

LUMINANCE DATA (CD/M²)

Vertical Angle	0°	45°	90°
45°	4752	4723	4674
55°	4381	4361	4315
65°	3927	3927	3879
75°	3105	3083	3083
85°	1997	1997	1931

Go to www.focalpointlights.com for additional photometric data.

Stonco

CATALOG NO. _____

TYPE NO. _____ JOB NAME _____

ROUGHLYTE™ Series
Ceiling and Surface Mount

ORDERING INFORMATION

Catalog Number: Example: VK1GC

VK

FIXTURE
VK-Surface and Ceiling Mount

WATTAGE
1-100W
2-200W

DESCRIPTION
GC-Glass Globe and Cast Guard
K-Glass Globe
No Suffix for unit only

ACCESSORIES

Accessories - See page 5-A

TECHNICAL INFORMATION

All incandescent Roughlyte ceiling and wall fixtures are not supplied with a lamp. This fixture requires a medium base incandescent A lamp. The lamp can be clear or coated.

DIMENSIONS

Catalog No.	Height (H)	Dia. (D)
VK1	2"	4-1/8"
VK2	2"	5-1/8"
VK1K	7"	4-1/4"
VK2K	8-3/4"	5-1/8"
VK1GC	7-1/2"	4-1/4"
VK2GC	9-1/4"	5-1/4"

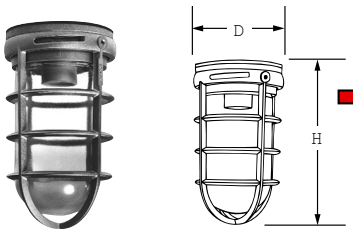

VK1GC
Ceiling Unit with
Cast Guard and Glass Globe

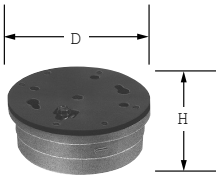

VK1
Round Surface
Adapter

PRODUCT SPECIFICATIONS

- VK Roughlyte fixtures are for use on ceilings and canopies. VK units guard against moisture and debris in exterior applications (for globe down mounting only).
  Not recommended for use in hazardous locations.
- 100W fixtures fit all 3-1/2" round and octagon boxes and all 4" round boxes.
- Heat and shock resistant glass globe.
- Sockets are pre-wired with extra long 1/2" stripped leads.
- For 3/4" conduit, use VK series with VXL13 universal box.
- Patented.

LAMPING: (1) 18W MAXIMUM 2,700K LED A19 REPLACEMENT LAMP - MINIMUM 1100 LUMENS.

EXACT SPECIFICATION TO BE CONFIRMED AT TIME OF PURCHASE BASED ON CURRENT TECHNOLOGY AND MARKET AVAILABILITY.

LIGHTING SUPPLIER WILL NEED TO FURNISH SAMPLE OF FIXTURE WITH LAMP FOR REVIEW OF DIMMING AND COLOR TEMPERATURE BY OWNER, ARCHITECT, AND LIGHTING DESIGNER PRIOR TO FINALIZING SPECIFICATION.

Crescent/Stonco • 200 Franklin Square Drive • Somerset, NJ 08873 • 800-334-2212 • www.stoncolighting.com 01/13

Stonco is a Philips company

PHILIPS

Date: _____ Type: _____

Firm Name: _____

Project: _____

eW Fuse Powercore

1 ft (305 mm), 12.5 W / ft, 2700 K, 30° x 60° beam angle

Linear interior LED wall grazing fixture with solid white light

LIGHTING SUPPLIER TO FURNISH ROSCO GEL SLEEVE WITH PRE-CUT SLIT (COLOR TBD) TO CONTINUOUSLY COVER FIXTURE RUN LENGTH.

With narrow and medium beams of intense white light, eW Fuse Powercore is an excellent choice for a full range of surface grazing and wall-washing applications. Its ultra-compact form factor permits installation in tight spaces too small to accommodate conventional grazing fixtures. Meets or exceeds the performance of comparable linear fluorescent fixtures while lowering installation, energy, and maintenance costs. Offers environmentally-conscious buyers a green, energy-efficient grazing fixture with industry-leading light quality and quantity.

- Lower cost than comparable fluorescent grazing fixtures — With long useful source life and low-maintenance operation, eW Fuse Powercore represents a cost-effective alternative to traditional grazing fixtures.
- High-performance illumination and beam quality — eW Fuse Powercore is available in 1 ft (305 mm) and 4 ft (1.2 m) die-cast aluminum housings with a 10° x 60° or 30° x 60° beam angle. Interlocking connectors accommodate end-to-end placement without visible light scalloping between fixtures.
- Multiple color temperatures — Available in 2700 K, 3000 K, 3500 K, and 4000 K color temperatures for applications calling for warm, neutral, or cool white light
- Integrates patented Powercore technology — Powercore rapidly, efficiently, and accurately controls power directly from line voltage, eliminating the need for an external power supply. Contractor-friendly installation dramatically simplifies installation and lowers total system cost.
- Support for multiple voltages — Accepts power input of 100 – 277 VAC for consistent installation and operation from line voltage in a variety of locations.
- Dimming capability — Patented DIMand technology offers smooth dimming capability with selected commercially available reverse-phase ELV-type dimmers.
- Simple installation — Powercore integrated power management technology simplifies installation and allows long product runs. Easy-to-install 4 ft (1.2 m) mounting tracks allow quick project setup in linear applications.
- Easy mounting and positioning — With end-to-end locking power connectors that can make 180° turns, eW Fuse Powercore fixtures are easy to position in even the most challenging mounting circumstances. Fixtures rotate in 10° increments through 180° for precise aiming and color mixing. Optional mounting tracks support vertical and overhead positioning. 1 ft (305 mm) and 5 ft (1.5 m) jumper cables can add extra space between fixtures.

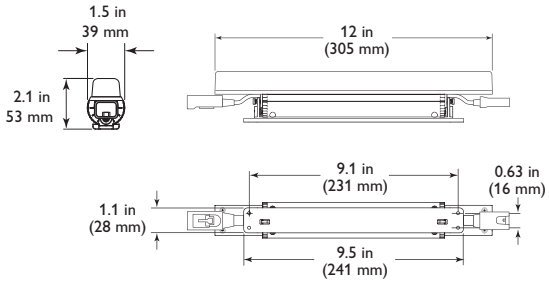

For detailed product information, please refer to the eW Fuse Powercore Product Guide at www.philipscolorkinetics.com/ls/essentialwhite/ewfusepc/

PHILIPS

Specifications

Due to continuous improvements and innovations, specifications may change without notice.

Item	Specification	Details
Output	Lumens†	573
	Efficacy (lm / W)	47.0
	CRI	82
	Lumen Maintenance‡	50,000 hours L70 @ 25° C 37,000 hours L70 @ 50° C 90,000 hours L50 @ 25° C 80,000 hours L50 @ 50° C
Electrical	Input Voltage	100 – 277 VAC, auto-switching, 50 / 60 Hz
	Power Consumption	13.5 W maximum at full output, steady state
	Power Factor	.99 @ 120 V
Control	Dimming	Compatible with selected commercially available reverse-phase ELV-type dimmers§
Physical	Dimensions *(Height x Width x Depth)*	2.1 x 12 x 1.5 in (53 x 305 x 39 mm)
	Weight	0.98 lbs (.45 kg)
	Housing	Die-cast aluminium, white powder-coated finish
	Lens	Polycarbonate
	Fixture Connections	Integral male / female connectors
	Temperature Ranges	-40° – 122° F (-40° – 50° C) Operating -4° – 122° F (-20° – 50° C) Startup -40° – 176° F (-40° – 80° C) Storage
	Humidity	0 – 95%, non-condensing
	Fixture Run Lengths	To calculate fixture run lengths and total power consumption for your specific installation, download the Configuration Calculator from www.philipscolorkinetics.com/support/install_tool/
Certification and Safety	Certification	UL / cUL, FCC, Class B, CE, C-Tick, CCC
	Environment	Dry / Damp Location, IP20

* Color temperatures conform to nominal CCTs as defined in ANSI Chromaticity Standard C78.377A.

† Lumen measurement complies with IES LM-79-08 testing procedures.

‡ L_{70} = 70% lumen maintenance (when light output drops below 70% of initial output). L_{50} = 50% lumen maintenance (when light output drops below 50% of initial output). Ambient luminaire temperatures specified. Lumen maintenance calculations are based on lifetime prediction graphs supplied by LED source manufacturers. Calculations for white-light LED fixtures are based on measurements that comply with IES LM-80-08 testing procedures. Refer to www.philipscolorkinetics.com/support/appnotes/lm-80-08.pdf for more information.

§ Refer to www.philipscolorkinetics.com/support/appnotes/ for specific details.

Accessories

Item	Type		Item Number	Philips 12NC
Leader Cable with terminator and strain relief	UL / cUL	10 ft (3 m)	108-000047-00	910503700972
	CE / CCC	10 ft (3 m)	108-000047-01	910503700973
Wiring Compartment with terminator	UL / cUL		120-000077-01	910503700994
Jumper Cable	UL / cUL	1 ft (305 mm)	108-000048-00	910503700974
		5 ft (1.5 m)	108-000048-01	910503700975
	CE / CCC	1 ft (305 mm)	108-000048-02	910503700976
		5 ft (1.5 m)	108-000048-03	910503700977
Terminators	10 / box		120-000099-00	910503701120
Mounting Track, White	Quantity 1	4 ft (1219 mm)	120-000124-00	910503701787

Photometrics

1 ft (305 mm), 12.5 W / ft, 2700 K, 30° x 60° beam angle

Polar Candela Distribution

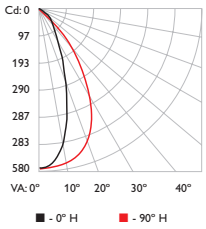

	0.0	22.5	45.0	67.5	90.0
0	573	573	573	573	573
5	557	559	565	568	571
15	367	391	459	518	540
25	179	200	269	385	431
35	92	96	127	206	264
45	55	55	59	69	82
55	36	32	30	27	31
65	25	21	16	15	18
75	16	13	9	8	8
85	9	8	6	4	2
90	8	7	5	3	1

90° 80° 70° 60° 50°

Illuminance at Distance

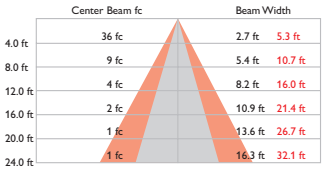

24.8 ft (7.6 m)
1 fc maximum distance

Vert. Spread: 37.6°
Horiz. Spread: 67.5°

Lumens	573
Efficacy	47.0 lm/W

For lux multiply fc by 10.7

OPTIBIN® CK TECHNOLOGY | POWERCORE® CK TECHNOLOGY | DIMAND™ CK TECHNOLOGY

Fixtures

Type	Beam Angle	Item Number	Philips 12NC
1 ft (305 mm) 2700 K	10° x 60°	523-000065-08	910503701717
	30° x 60°	523-000065-12	910503701721
1 ft (305 mm) 3000 K	10° x 60°	523-000065-09	910503701718
	30° x 60°	523-000065-13	910503701722
1 ft (305 mm) 3500 K	10° x 60°	523-000065-10	910503701719
	30° x 60°	523-000065-14	910503701723
1 ft (305 mm) 4000 K	10° x 60°	523-000065-11	910503701720
	30° x 60°	523-000065-15	910503701724
4 ft (1.2 m) 2700 K	10° x 60°	523-000065-16	910503702617
	30° x 60°	523-000065-20	910503702621
4 ft (1.2 m) 3000 K	10° x 60°	523-000065-17	910503702618
	30° x 60°	523-000065-21	910503702622
4 ft (1.2 m) 3500 K	10° x 60°	523-000065-18	910503702619
	30° x 60°	523-000065-22	910503702623
4 ft (1.2 m) 4000 K	10° x 60°	523-000065-19	910503702620
	30° x 60°	523-000065-23	910503702624

Use Item Number when ordering in North America.

PHILIPS

Philips Color Kinetics
3 Burlington Woods Drive
Burlington, Massachusetts 01803 USA
Tel 888.385.5742
Tel 617.423.9999
Fax 617.423.9998
www.philipscolorkinetics.com

Copyright © 2011 – 2013 Philips Solid-State Lighting Solutions, Inc. All rights reserved. Chromacore, Chromasic, CK, the CK logo, Color Kinetics, the Color Kinetics logo, ColorBlast, ColorBlaze, ColorBurst, ColorGraze, ColorPlay, ColorReach, iW Reach, eW Reach, eW Fuse, DIMand, EssentialWhite, eW, iColor, iColor Cove, IntelliWhite, iW, iPlayer, Optibin, and Powercore are either registered trademarks or trademarks of Philips Solid-State Lighting Solutions, Inc. in the United States and / or other countries. All other brand or product names are trademarks or registered trademarks of their respective owners. Due to continuous improvements and innovations, specifications may change without notice.

DAS-000079-02 R05 08-13

Job Name: _____ **Fixture Type:** _____ **Qty:** _____

Commercial Grade Track

Single Circuit **Dual Circuit**

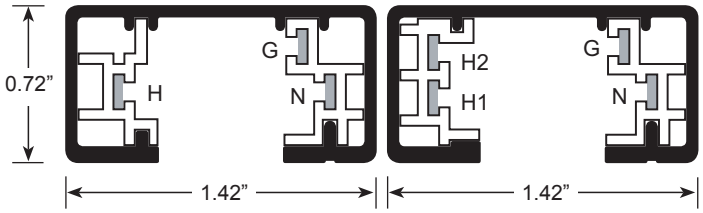

Track Section

		1-Circuit	2-Circuit
Black	2 ft.	L002B	H2T02B
	4 ft.	L004B	H2T04B
	8 ft.	L008B	H2T08B
White	2 ft.	L002W	H2T02W
	4 ft.	L004W	H2T04W
	8 ft.	L008W	H2T08W

Custom lengths available. Please consult factory.

LIGHTING SUPPLIER TO FURNISH WITH END CAPS, CONNECTORS, FEEDS AND TRACK LENGTHS AS REQUIRED BY LAYOUT.

Components (continued on back)

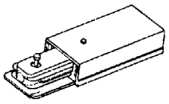

End Feed

Used when energizing track from an outlet box.

	1-Circuit	2-Circuit
Black	L010B	H2001B
White	L010W	H2001W

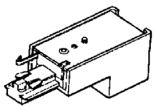

End Feed for Conduit

Used when necessary to feed surface mounted track with conduit.

	1-Circuit	2-Circuit
Black	L017B	H2008B
White	L017W	H2008W

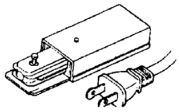

End Feed with Plug

Used when energizing track from a wall receptacle.

	1-Circuit
Black	L010LB
White	L010LW

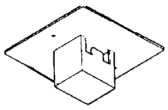

Floating Feed

Used when energizing track from any point along the track run.

	1-Circuit
Black	L011B
White	L011W

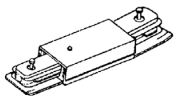

Center Feed

Used to join two sections of track together in a straight line. May be used as a feed point.

	1-Circuit	2-Circuit
Black	L012PB	H2005IB
White	L012PW	H2005IW

Last updated 08/05/2010.

TIMES SQUARE LIGHTING
5 Holt Drive • Stony Point, NY 10980
Phone: 845-947-3034 • Fax: 845-947-3047 • www.tslight.com
Specifications are subject to change without notice.

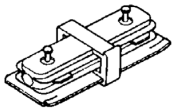

Straight Connector

Used to join two sections of track together in a straight line.

	1-Circuit	2-Circuit
Black	L012B	H2003B
White	L012W	H2003W

Flex Connector

Used to join two sections of track together to create angles from 0° to 360°. Can be flexed on horizontal or vertical planes.

	1-Circuit	2-Circuit
Black	L018B	H2004B
White	L018W	H2004W

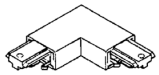

L Connector

Used to join two sections of track together at a 90º angle.

	1-Circuit	2-Circuit
Black	L014B	H2005LB
White	L014W	H2005LW

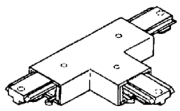

T Connector

Used to join three sections of track together in a “T” configuration.

	1-Circuit	2-Circuit
Black	L015B	H2006FB
White	L015W	H2006FW

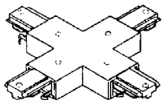

X Connector

Used to join four sections of track together in an “X” configuration.

	1-Circuit	2-Circuit
Black	L016B	H2007B
White	L016W	H2007W

Cover Plate

Used to cover an outlet box.

	1-Circuit	2-Circuit
Black	L019B	L019B
White	L019W	L019W

End Cap

Used to end any open configuration of track.

	1-Circuit	2-Circuit
Black	L024B	L024B
White	L024W	L024W

Stem Mount Kit

Used to mount track.

	1-Circuit	2-Circuit
12”	SK12	SK12
18”	SK18	SK18
24”	SK24	SK24
36”	SK36	SK36

Custom lengths available. Please consult factory.

Job Name: **Fixture Type:** **Qty:**

Line Voltage by Times Square Lighting

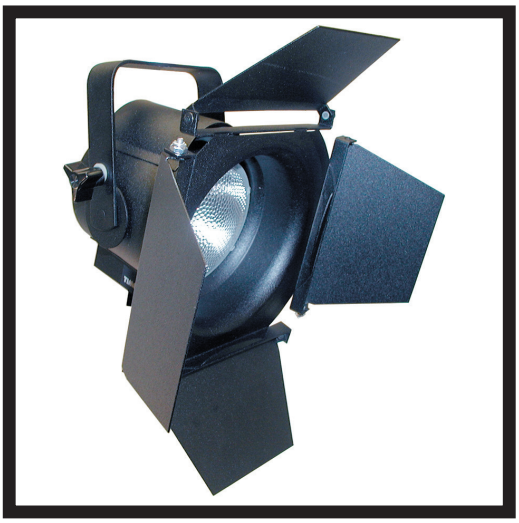

Manufactured in the USA - IBEW

c UL us LISTED

C4M 50-75W PAR30

The C4M is a compact, theatrical style unit designed for Halogen Performance Plus PAR30 lamps. Available in 50, 60 and 75-watts, these lamps come in a variety of beam spreads ranging from 9 to 35 degrees.

The C4M is ideal for lighting in galleries, museums and retail applications. Equipped with 4-way locking barndoors to control light spill and an internal accessory holder that accepts louvers and filters. Available in standard black, white and silver finishes. Custom colors are available by request and at an additional charge.

Features:

- Theatrical design
- Locking barndoors
- Accepts 50, 60 and 75-watt PAR30 lamps
- Numerous mounting options and accessories
- Weight: 2.7 lbs

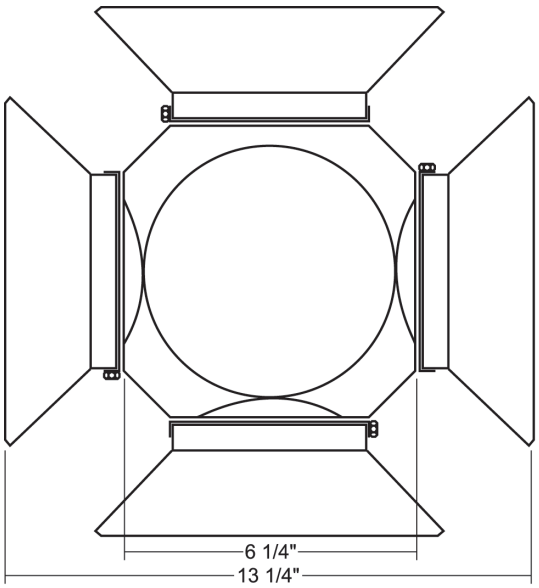

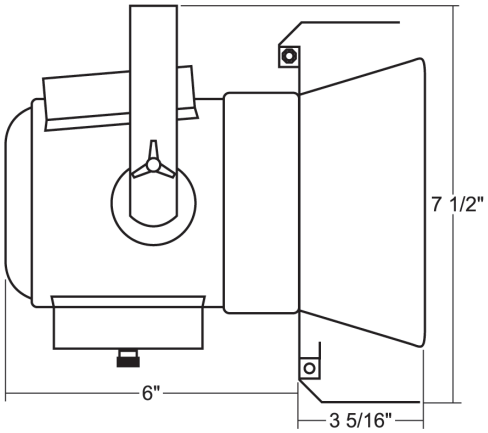

Last updated 04/09/2014.

TIMES SQUARE LIGHTING
5 Holt Drive • Stony Point, NY 10980
Phone: 845-947-3034 • Fax: 845-947-3047 • www.tslight.com
Specifications are subject to change without notice.

Mounting Options

AD1
Track adapter for commercial grade 1 & 2 circuit track. 120V. For use with Lightweight fiixtures

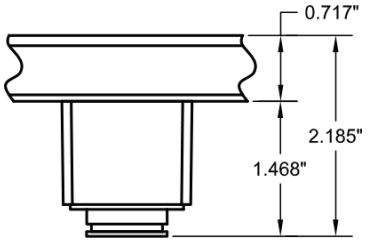

T1
Track adapter for commercial grade 1 & 2 circuit track. 120V. For use with larger, heavier fixtures.

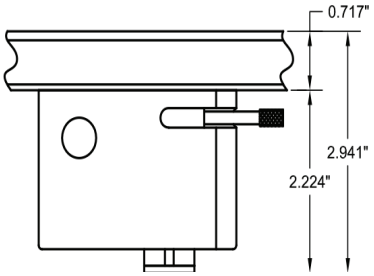

TA2
Track adapter for G-Series specification grade 2-circuit track. 120V.

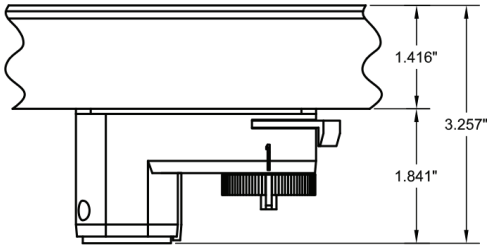

TA3
Track adapter for G-Series specification grade 3-circuit track. 120V.

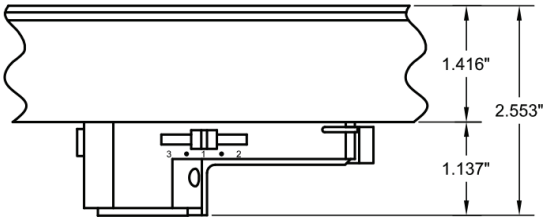

TA1 / TE2 (2 circuit)
Track adapter for E-Series specification grade track. 1 or 2 circuit. 120V.

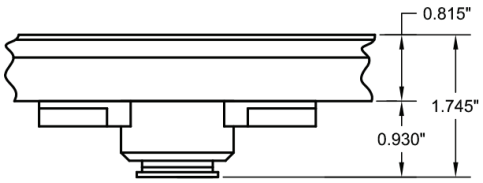

ST2
2 circuit track adapter for Data Bus. Specification grade track. 120V.

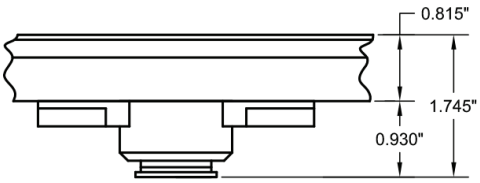

CM4
Canopy mount.

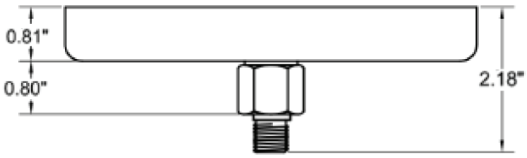

US1
6 5/8" x 1 1/2" Unistrut adapter.

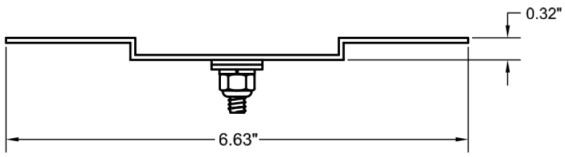

Mounting Options

TB4
6 1/4" Portable wall mount/table base floor, wall or table use.

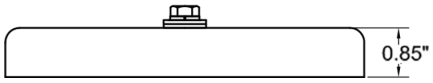

TB8
8" x 8" Portable table base for floor or table use.

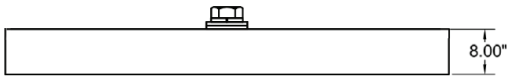

MC
Light duty pipe clamp for small fixtures. For pipes up to 1 5/16" O.D.

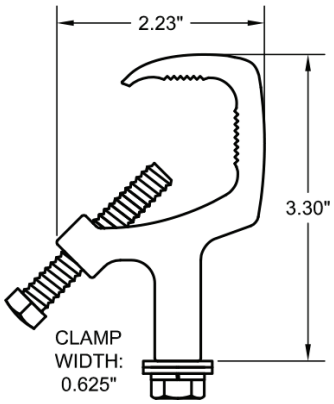

MN
Medium duty pipe clamp for small to large fixtures. For pipes up to 2" O.D.

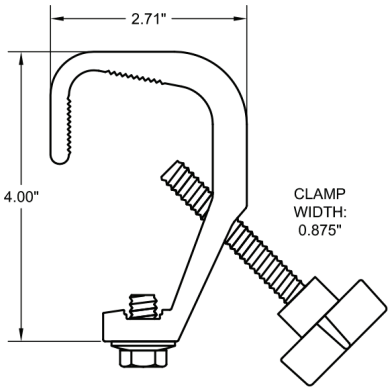

PC9M
Heavy duty pipe clamp for large, heavy fixtures. For pipes up to 2" O.D.

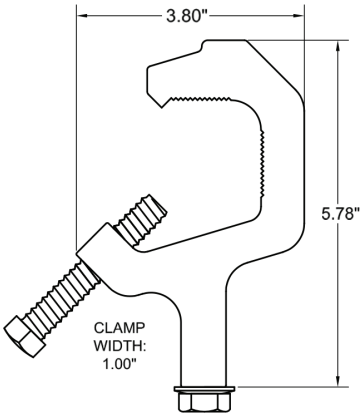

C4M 50-75W PAR30

Specify:	C4M	-		-		-	
	MODEL NUMBER		**FINISH**		**MOUNTING (optional)**		**ACCESSORIES (optional)**
Example:	C4m	-	-B	-	-T1	-	-LV17

Photometric Data

75PAR30/H/SP10 10°

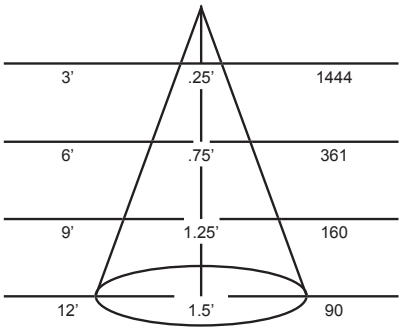

75PAR30/H/FL25 25°

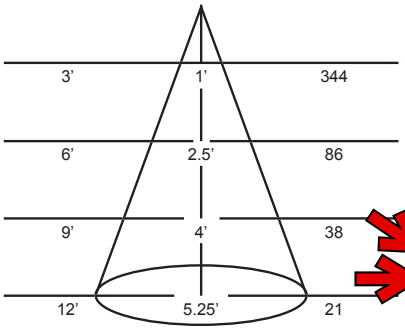

75PAR30/H/FL35 35°

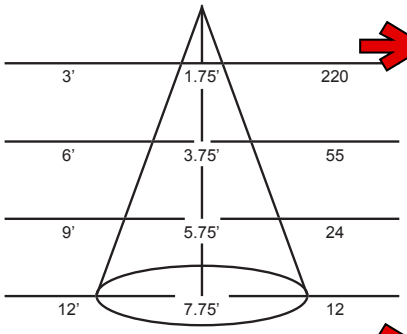

Lamp Types

50PAR30/HIR/SP9 50W; 3000Hrs; 9° Beam; 13000 CBCP; 2810°K Color Temp

50PAR30/HIR/FL25 50W; 3000Hrs; 25° Beam; 2700 CBCP; 2810°K Color Temp

50PAR30/HIR/FL35 50W; 3000Hrs; 35° Beam; 1500 CBCP; 2810°K Color Temp

60PAR30/H/SP10 60W; 3000Hrs; 10° Beam; 10000 CBCP; 2800°K Color Temp

60PAR30/H/FL25 60W; 3000Hrs; 25° Beam; 2400 CBCP; 2800°K Color Temp

60PAR30/H/FL35 60W; 3000Hrs; 35° Beam; 1700 CBCP; 2800°K Color Temp

75PAR30/H/SP10 75W; 3000Hrs; 10° Beam; 13000 CBCP; 2830°K Color Temp

75PAR30/H/FL25 75W; 3000Hrs; 25° Beam; 3100 CBCP; 2830°K Color Temp

75PAR30/H/FL35 75W; 3000Hrs; 35° Beam; 2000 CBCP; 2830°K Color Temp

Accessories

LV17	Louver
CF17	Color Frame
GF17	Glass Color Filter
DF17	Dichroic Color Filter
GF17-600	5°x50° Linear Lens
GF17-601	Beam Softener
GF17-673	50°x50° Spread Lens
GF17-703	UV Blocking Filter
CC18	Coiled Cord
SC-24	Safety Cable
IP	Integral Dimmer

Extension Wands

SP 12	12" Stem
SP 18	18" Stem
SP 24	24" Stem
SP X	Custom Length

Finish

B	Black
W	White
S	Silver
CC	Custom Color

(1) SPREAD LENS (SPREAD TBD)
(1) GLASS COLOR FILTER (COLOR TBD)

LAMPING: (1) 14W MAXIMUM 2,700K LED PAR30 REPLACEMENT LAMP - SPOT BEAM SPREAD - MINIMUM 1150 LUMENS AND 11700 CBCP.

EXACT SPECIFICATION TO BE CONFIRMED AT TIME OF PURCHASE BASED ON CURRENT TECHNOLOGY AND MARKET AVAILABILITY.

LIGHTING SUPPLIER WILL NEED TO FURNISH SAMPLE OF FIXTURE WITH LAMP FOR REVIEW OF DIMMING AND COLOR TEMPERATURE BY OWNER, ARCHITECT, AND LIGHTING DESIGNER PRIOR TO FINALIZING SPECIFICATION.

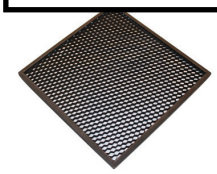

SPECIFICATION SHEET PAGE 1/2

T3450W

3 1/2" Series

Project
Notes
Fixture Type
Date

Low Profile Adjustable Wall Wash Trim

T3450W-11
(illustrated)

SPECIFICATIONS

TRIM	Powder coat painted or plated die-formed steel. Different finishes available. Painted finishes available with Marine Grade option.
LAMPS	**MR16** 20-50W **GU/GZ-10** 50W This product was designed for MR16 halogen lamps or GU/GZ-10. If you want to use the dimming option and you replace the MR16 or GU/GZ-10 lamp by an equivalent LED lamp, please see dimmer compatibility list on our Website.
REFLECTOR	**Standard: Anodized Aluminum** Available:

Anodized	**Specular**	**Painted**
Azure **(AZ)**	Black **(BK)**	White **(-01)**
Burnt Orange **(BO)**	Champagne **(CH)**	Black **(-02)**
Cobalt Blue **(CB)**	Clear **(CL)**	Matte White **(-11)**
Inca Gold **(IG)**		
Ruby **(RU)**		

CEILING CUTOUT	**Ø 3 5/8" (92 mm)**

COMPATIBLE HOUSINGS	**Remodel Housing**	**New Construction Housing**	**Insulated Housing**
	50W MR16 GU 5.3 IT3000LE IT3000LM	**50W MR16 GU 5.3** NW3000CE NW3000CM NW3000LE NW3000LM **50W GU/GZ-10** NW3000LT	**20W MR16 GU 5.3** ISMR3000E20 ISMR3000M20 **35W MR16 GU 5.3** ISMR3000E35 ISMR3000M35 **50W MR16 GU 5.3** ISMR3000M **50W GU/GZ-10** ISMR3000T

CERTIFICATION	cULus **E174023** for **damp locations**
WARRANTY	1 year for standard finishes, 2-year on "Marine Grade" finish.

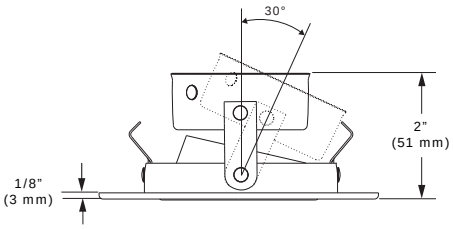

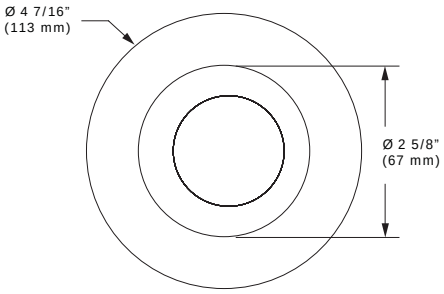

c UL us LISTED

MADE IN CANADA

CONTRAST LIGHTING

CONTRAST LIGHTING M. L. INC.
1009 RUE DU PARC-INDUSTRIEL
ST-JEAN-CHRYSOSTOME QC G6Z 1C5
CANADA

Tel: 1-888-839-4624
Fax: 1-877-839-7057
info@contrastlighting.com
www.contrastlighting.com

2014-04

SPECIFICATION SHEET PAGE 2/2

T3450W

3 1/2" Series

LIGHTING SUPPLIER TO FURNISH:
(1) HEXCELL LOUVER
(1) SPREAD LENS (SPREAD TBD)
(1) ROSCO DICHROIC COLOR FILTER
(COLOR TBD) - REFER TO "DICHRO" CUT

CODIFICATION EXAMPLE

T3450W-11BKMG

MODEL: T3450W
FINISH: 11
REFLECTOR: BK
MARINE GRADE OPTION: MG

LAMPING: (1) 12W MAXIMUM 2,700K LED MR16 REPLACEMENT LAMP - SPOT BEAM SPREAD - MINIMUM 400 LUMENS AND 5600 CBCP.

EXACT SPECIFICATION TO BE CONFIRMED AT TIME OF PURCHASE BASED ON CURRENT TECHNOLOGY AND MARKET AVAILABILITY.

LIGHTING SUPPLIER WILL NEED TO FURNISH SAMPLE OF FIXTURE WITH LAMP FOR REVIEW OF DIMMING AND COLOR TEMPERATURE BY OWNER, ARCHITECT, AND LIGHTING DESIGNER PRIOR TO FINALIZING SPECIFICATION.

ORDERING CODE

MODEL	TRIM FINISH		REFLECTOR		MARINE GRADE
T3450W					
T3450W	**-01**	White	**ANODIZED**		**MG** (optional)
	-02	Black	**...**	Aluminum (standard)	May be applied on finishes:
	-03	Gold Plated 24K	**AZ**	Azur	-01, -02, -05, -06, -11
	-04	Chrome	**BO**	Burnt Orange	and -15.
	-04BR	Brushed Chrome	**IG**	Inca Gold	
	-05	Architectural Bronze	**RU**	Ruby	
	-06	Antique Copper	**CB**	Cobalt Blue	
	-08	Antique Sliver			
	-11	Matte White	**SPECULAR**		
	-12BR	Brushed Nickel	**CL**	Clear	
	-13	Satin Nickel	**BK**	Black	
	-14	Almond	**CH**	Champagne	
	-15	Metallic Grey			
	-16	Satin Chrome	**PAINTED**		
			-01	White	
			-02	Black	
			-11	Matte White	

MARINE GRADE - Unless otherwise indicated, trims are for interior, cold and exterior locations where fixtures are not subject to direct rain or snow exposure as in soffits. MARINE GRADE treatment is recommended for exterior, shower and high salinity environment.

c UL us LISTED

MADE IN CANADA

CONTRAST LIGHTING

CONTRAST LIGHTING M. L. INC.
1009 RUE DU PARC-INDUSTRIEL
ST-JEAN-CHRYSOSTOME QC G6Z 1C5
CANADA

Tel: 1-888-839-4624
Fax: 1-877-839-7057
info@contrastlighting.com
www.contrastlighting.com

2014-04

SPECIFICATION SHEET

3 1/2" 3000 SERIES

NW3000CM

NW3000CM2
NW3000CM3

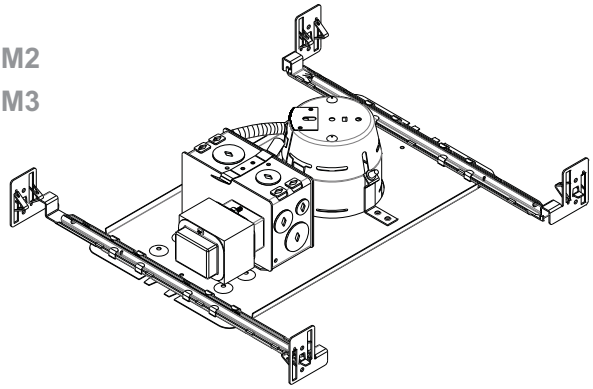

SHORT NEW CONSTRUCTION HOUSING WITH MAGNETIC TRANSFORMER

Damp Location	YES
MR16	MR16 50W MAX
Voltage	NW3000CM : 120 Volts (CAN & USA) NW3000CM2 : 277 Volts (USA) NW3000CM3 : 347 Volts (CANADA)
	Magnetic Transformer: EC50M 50 VA 120V / 12V EC50M2 50 VA 277V / 12V EC50M3 50 VA 347V / 12V
	Thermal Protector: T°C 130°C No 033
OD Cut	3 5/8" (92 mm)
LISTED	E174023
Dimensions	Overall Dimensions: Length: 13 1/2" (343 mm) | With bars: 15 3/8" (391 mm) Width: 7 3/8" (187 mm) | With bars: min 10" (254 mm) Height: 3 7/16" (94 mm)

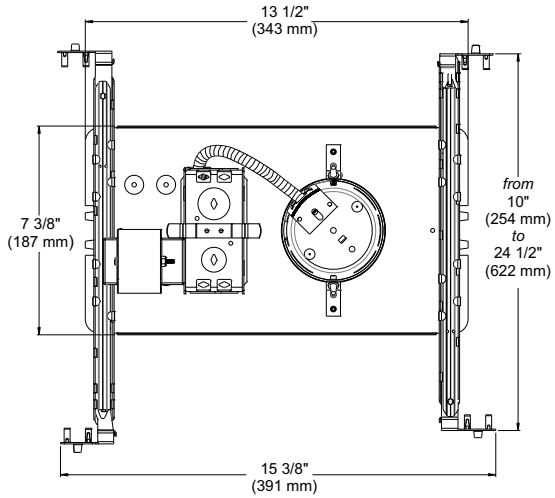

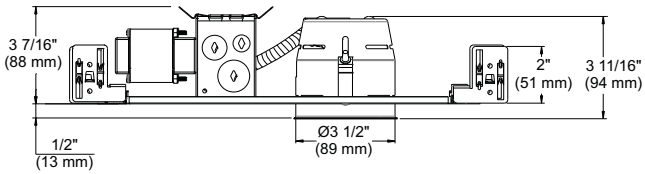

COMPATIBLE TRIMS

37W MR16			50W MR16		
R3152	S3151	T3145DG	R3151	T3145D ST	T3450D SM
R3171	S3400	T3152	R3151K	T3145W	T3450D ST
R3450D	S3400D	T3250DG	R3151W	T3165	T3450K
R3470	S3450	T3602	R3151WK	T3185	T3450W
R3470D	S3450D	T3652	R3601	T3200	T3450WK
R3602	S3500	T3671	R3601W	T3250	T3500
R3652	S3500D	T3700	R3651	T3260	T3500D SM
S3145	S3601	T3800	R3651W	T3300	T3500D ST
S3145D	S3651	T3850	T3000	T3400	T3500W
		T3900	T3100	T3400D SM	T3600
			T3125	T3400D ST	T3650
			T3145	T3400W	
			T3145D SM	T3450	

TECHNICAL SPECIFICATIONS

0.051"(1.3 mm) thickness galvanized steel
Below-ceiling accessible
Hooks: #CAN 2,088,648 and #USA 5,377,088 5,377,088
Installs on ceiling up to 7/8" thick
Perfect fit into ceiling
No light leakage

MADE IN CANADA

LISTED
Certified UL Standards

Your representative :_____

Your project :_____

CONTRAST LIGHTING INC.
1009, rue du Parc Industriel, Saint-Jean-Chrysostome QC G6Z 1C5, CANADA Tel: 1-888-839-4624 Fax: 1-877-839-7057
info@contrastlighting.com
www.contrastlighting.com

2012-11

SPECIFICATION SHEET PAGE 1/2

T3450

3 1/2" Series

Project
Notes
Fixture Type
Date

Low Profile Regressed Trim

T3450-12BR
(illustrated)

SPECIFICATIONS

TRIM	Powder coat painted or plated die-formed steel. Different finishes available. Painted finishes available with Marine Grade option.
LAMPS	**MR16** 20-50W **GU/GZ-10** 50W **GX10** 20W HID (High Intensity Discharge) This product was designed for MR16 halogen lamps or GU/GZ-10. If you want to use the dimming option and you replace the MR16 or GU/GZ-10 lamp by an equivalent LED lamp, please see dimmer compatibility list on our Website.
REFLECTOR	**Standard: Anodized Aluminum** Available: **Anodized**: Azure **(AZ)**, Burnt Orange **(BO)**, Cobalt Blue **(CB)**, Inca Gold **(IG)**, Ruby **(RU)** **Specular**: Black **(BK)**, Champagne **(CH)**, Clear **(CL)** **Painted**: White **(-01)**, Black **(-02)**, Matte White **(-11)**
CEILING CUTOUT	**Ø 3 5/8" (92 mm)**
COMPATIBLE HOUSINGS	**Remodel Housing**: **50W MR16 GU 5.3** IT3000E IT3000M IT3000LE IT3000LM **50W GU/GZ-10** IT3000LT **20W GX10 (HID)** MH3000GX120 **New Construction Housing**: **50W MR16 GU 5.3** NW3000CE NW3000CM NW3000LE NW3000LM NWD3000LE NWT3000LE **50W GU/GZ-10** NW3000LT **Insulated Housing**: **20W MR16 GU 5.3** ISMR3000E20 ISMR3000M20 **35W MR16 GU 5.3** ISMR3000E35 ISMR3000M35 **50W MR16 GU 5.3** ISMR3000M **50W GU/GZ-10** ISMR3000T
CERTIFICATION	cULus **E174023** for **damp locations**
WARRANTY	1 year for standard finishes, 2-year on "Marine Grade" finish

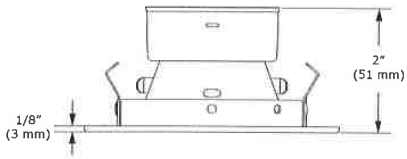

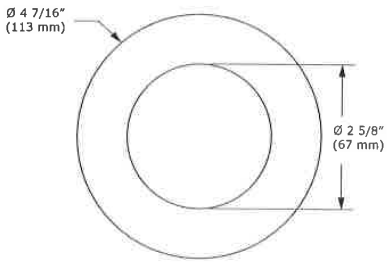

c UL us LISTED

MADE IN CANADA

CONTRAST LIGHTING

CONTRAST LIGHTING M. L. INC.
1009 RUE DU PARC-INDUSTRIEL
ST-JEAN-CHRYSOSTOME QC G6Z 1C5
CANADA

Tel: 1-888-839-4624
Fax: 1-877-839-7057
info@contrastlighting.com
www.contrastlighting.com

2014-04

SPECIFICATION SHEET PAGE 2/2

T3450

3 1/2" Series

LIGHTING SUPPLIER TO FURNISH:
(1) HEXCELL LOUVER
(1) SPREAD LENS (SPREAD TBD)
(1) ROSCO DICHROIC COLOR FILTER
(COLOR TBD) - REFER TO "DICHRO" CUT

LAMPING: (1) 12W MAXIMUM 2,700K LED MR16 REPLACEMENT LAMP - SPOT BEAM SPREAD - MINIMUM 400 LUMENS AND 5600 CBCP.

EXACT SPECIFICATION TO BE CONFIRMED AT TIME OF PURCHASE BASED ON CURRENT TECHNOLOGY AND MARKET AVAILABILITY.

LIGHTING SUPPLIER WILL NEED TO FURNISH SAMPLE OF FIXTURE WITH LAMP FOR REVIEW OF DIMMING AND COLOR TEMPERATURE BY OWNER, ARCHITECT, AND LIGHTING DESIGNER PRIOR TO FINALIZING SPECIFICATION.

CODIFICATION EXAMPLE

T3450-11BKMG

MODEL — FINISH — REFLECTOR — MARINE GRADE OPTION

ORDERING CODE

MODEL	TRIM FINISH		REFLECTOR		MARINE GRADE
T3450					
T3450	**-01**	White	**ANODIZED**		**MG** (optional)
	-02	Black	**...**	Aluminum (standard)	May be applied on finishes:
	-03	Gold Plated 24K	**AZ**	Azur	-01, -02, -05, -06, -11
	-04	Chrome	**BO**	Burnt Orange	and -15.
	-04BR	Brushed Chrome	**IG**	Inca Gold	
	-05	Architectural Bronze	**RU**	Ruby	
	-06	Antique Copper	**CB**	Cobalt Blue	
	-08	Antique Sliver			
	-11	Matte White	**SPECULAR**		
	-12BR	Brushed Nickel	**CL**	Clear	
	-13	Satin Nickel	**BK**	Black	
	-14	Almond	**CH**	Champagne	
	-15	Metallic Grey			
	-16	Satin Chrome	**PAINTED**		
			-01	White	
			-02	Black	
			-11	Matte White	

MARINE GRADE - Unless otherwise indicated, trims are for interior, cold and exterior locations where fixtures are not subject to direct rain or snow exposure as in soffits. MARINE GRADE treatment is recommended for exterior, shower and high salinity environment.

c UL us LISTED

MADE IN CANADA

CONTRAST LIGHTING

CONTRAST LIGHTING M. L. INC.
1009 RUE DU PARC-INDUSTRIEL
ST-JEAN-CHRYSOSTOME QC G6Z 1C5
CANADA

Tel: 1-888-839-4624
Fax: 1-877-839-7057
info@contrastlighting.com
www.contrastlighting.com

2014-04

SPECIFICATION SHEET

3 1/2" 3000 SERIES

NW3000CM

NW3000CM2
NW3000CM3

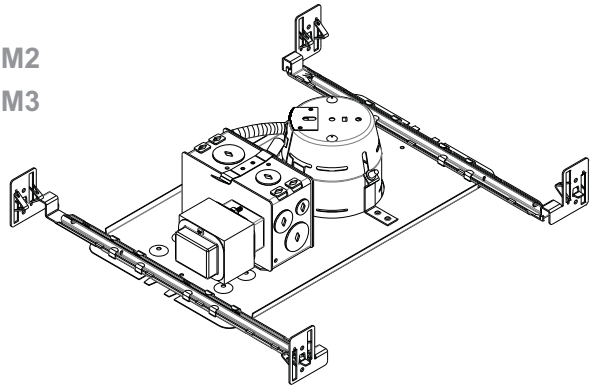

SHORT NEW CONSTRUCTION HOUSING WITH MAGNETIC TRANSFORMER

Damp Location	YES
MR16	MR16 50W MAX
Voltage	NW3000CM : 120 Volts (CAN & USA) NW3000CM2 : 277 Volts (USA) NW3000CM3 : 347 Volts (CANADA)
	Magnetic Transformer: EC50M 50 VA 120V / 12V EC50M2 50 VA 277V / 12V EC50M3 50 VA 347V / 12V
	Thermal Protector: T°C 130°C No 033
OD Cut	3 5/8" (92 mm)
LISTED	E174023
Dimensions	Overall Dimensions: Length: 13 1/2" (343 mm) | With bars: 15 3/8" (391 mm) Width: 7 3/8" (187 mm) | With bars: min 10" (254 mm) Height: 3 7/16" (94 mm)

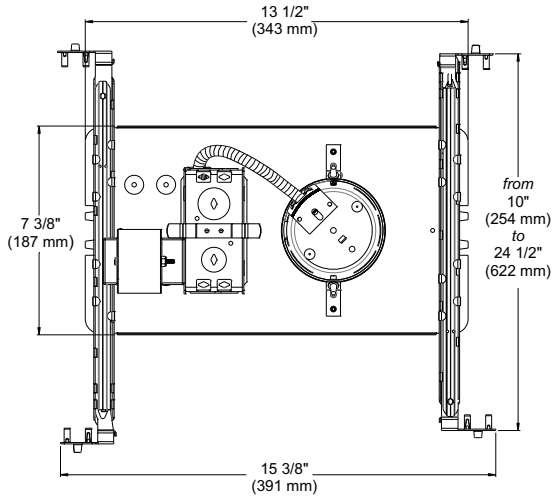

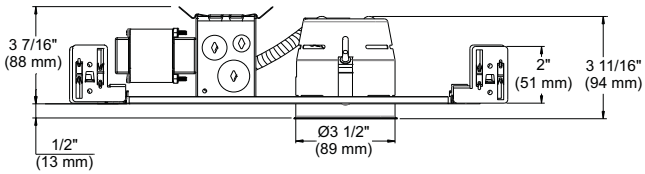

COMPATIBLE TRIMS

37W MR16			50W MR16		
R3152	S3151	T3145DG	R3151	T3145D ST	T3450D SM
R3171	S3400	T3152	R3151K	T3145W	T3450D ST
R3450D	S3400D	T3250DG	R3151W	T3165	T3450K
R3470	S3450	T3602	R3151WK	T3185	T3450W
R3470D	S3450D	T3652	R3601	T3200	T3450WK
R3602	S3500	T3671	R3601W	T3250	T3500
R3652	S3500D	T3700	R3651	T3260	T3500D SM
S3145	S3601	T3800	R3651W	T3300	T3500D ST
S3145D	S3651	T3850	T3000	T3400	T3500W
		T3900	T3100	T3400D SM	T3600
			T3125	T3400D ST	T3650
			T3145	T3400W	
			T3145D SM	T3450	

TECHNICAL SPECIFICATIONS

0.051"(1.3 mm) thickness galvanized steel
Below-ceiling accessible
Hooks: #CAN 2,088,648 and #USA 5,377,088 5,377,088
Installs on ceiling up to 7/8" thick
Perfect fit into ceiling
No light leakage

MADE IN CANADA

LISTED
Certified UL Standards

Your representative :_____

Your project :_____

CONTRAST LIGHTING
1009, rue du Parc Industriel, Saint-Jean-Chrysostome QC G6Z 1C5, CANADA Tel: 1-888-839-4624 Fax: 1-877-839-7057
info@contrastlighting.com
www.contrastlighting.com

2012-11

The Basic System

Designed by Environment Design Institute & Lighting Planners Associates

To specify the most attractive form of Advantage for an application, determine the appropriate light source and socket spacing. Tailor the system to the specific task by selecting from the listed options and accessories.

AV - 3 - KC - MC

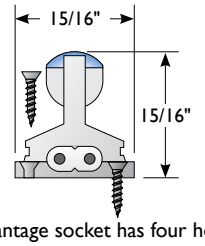

Each Advantage socket has four holes to accept mounting screws. Two screws installed at opposing corners provide easy and secure mounting.

Socket Spacing		Light Source		Options	
Code	Inches (mm)	Code	Style	Code	Option
2.4	2.4" (60 mm)	**KC**	2000K-2700K LED	**LNS**	Lens Cover
3	3" (75 mm)	**LLW**	2000K LED	**MC**	Mounting Channel
4	4" (100 mm)	**LWW**	2400K LED	**SR**	Symmetrical Reflector
6	6" (150 mm)	**LIW**	3000K LED	**AR**	Asymmetrical Reflector
		X3	3 Watt Xenon	**AVC**	C Channel
		X5	5 Watt Xenon	**AVL**	L Channel
				ACV	Channel Cover

Seamless Light

Quality indirect lighting requires a seamless flow of light. Proper spacing between sockets is the key factor in achieving this goal. Surface finish also has an influence. A matte white finish inside the cove and on the reflective surface is best. A glossy surface will reflect lamp images, no matter how closely the sockets are spaced.

Socket Spacing

Recommended socket spacing varies, depending on how close the fixture is positioned from the reflective surface. Maintain the minimum distances shown to eliminate socket shadows and hot spots. More lamps will produce more light, but they will not always produce more uniform light.

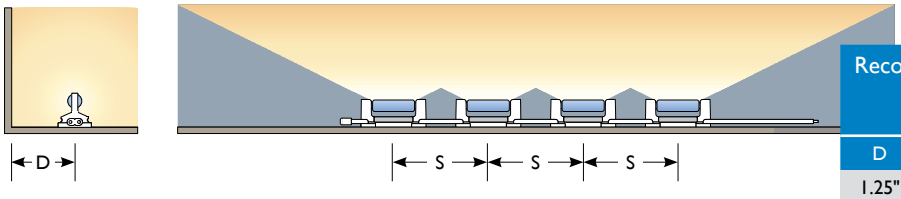

Recommended Spacing Guide
D = Distance to surface
S = Socket spacing

D	S
1.25"	No greater than 2.4" O.C.
2"	No greater than 3.0" O.C.
3"	No greater than 4.0" O.C.
4"	No greater than 6.0" O.C.

Options

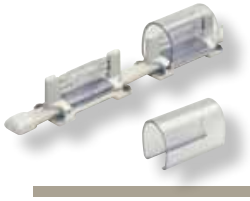

Lens Covers

To prevent direct contact with lamps, we offer a protective clear polycarbonate lens. The ends of each lens are open to allow heat to vent.

Part #: AV-LNS

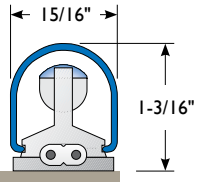

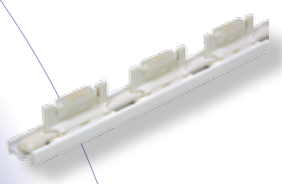

Mounting Channel

A high-temperature plastic channel is available as a mounting option. The channel is screwed in place and the sockets are snapped in. Maximum length is 100".

Part #: AV-MC

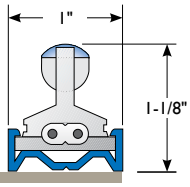

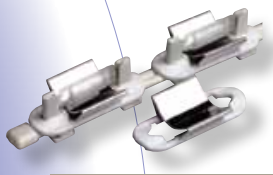

Symmetrical Reflector

These reflectors are for use with xenon lamps and snap onto sockets. They are used to focus light toward the center line of the fixture.

Part #: AVWH-REF-S

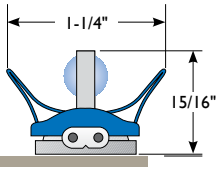

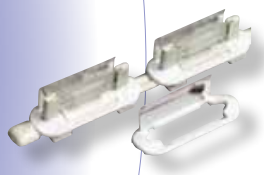

Asymmetrical Reflector

The asymmetrical reflectors are for use with LEDs or xenon lamps, and direct light output to one side of the fixture.

Part #: AVWH-REF-A

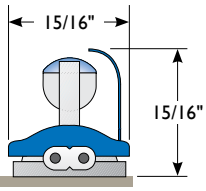

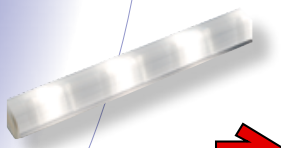

AVC Channel

This channel is rigid aluminum and available in satin or white. Lens covers are optional and ordered separately. Maximum length is 100".

Part #: AV-CH-SA (Satin Aluminum)
Part #: AV-CH-WH (White)

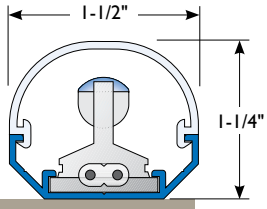

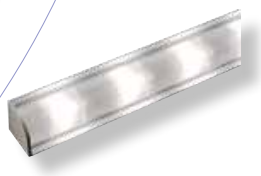

AVL Channel

The AVL profile has a fascia and is available in satin or white. Lens covers are optional and ordered separately. Maximum length is 100".

Part #: AV-LCH-SA (Satin Aluminum)
Part #: AV-LCH-WH (White)

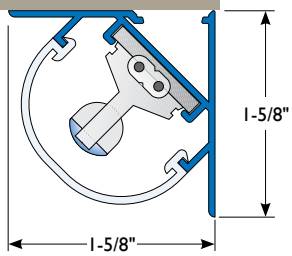

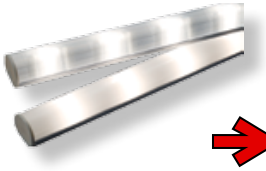

ACV Channel Lens

Lens covers are available in frosted white or clear prismatic. These cannot be used with 5 watt lamps spaced 2.4" O.C. Maximum length is 100".

Part #: AV-CV-CL (Clear Lens)
Part #: AV-CV-WH (White Lens)

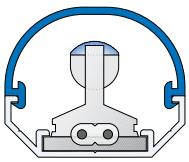

Connectors

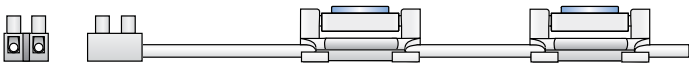

Terminal Block Connectors **Part #: AV-CONN**

One end of this connector screws directly to the Advantage fixture. The other end accepts AWG# 14, 12, or 10 wire. A screw hole is provided in the center of the connector for secure mounting.

Dimensions: 3/4" high x 3/4" wide x 7/8" long

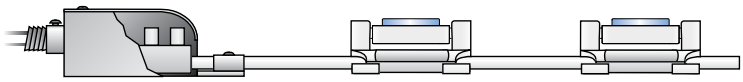

Mini Junction Box Connectors **Part #: AV-JBOX**

If installation involves running wire through a building structure, special wiring methods to the fixture may be required by code. A miniature junction box is available with a 1/2"Ø knockout for use with conduit fittings.

Dimensions: 1-9/16" high x 1-7/16" wide x 3-1/16" long

Accessories

End Caps

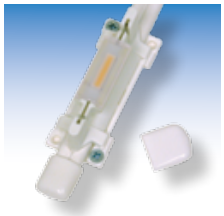

Part #: ECD-WH

End caps are attached to the end of each fixture to insulate the conductors.

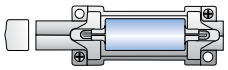

Mounting Screws

Part #: AV-MS

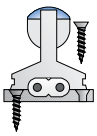

Each lamp socket of Advantage has four mounting holes. Use two screws in opposing corners for secure mounting.

Channel Clamps

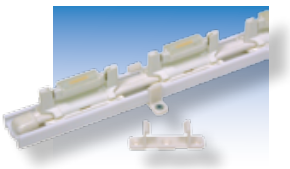

Part #: AV-CL

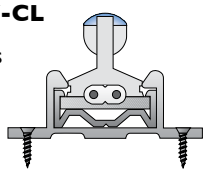

These clamps are for use with AV-MC Mounting Channel.
The clamps screw in place and the channel snaps in. Suggested spacing is every 8 inches.

AVC Channel End Caps

Part #'s: AV-EC-WH AV-EC-SV AV-EC-BK

End caps are available in white, silver or black.

AVL Channel End Caps

Part #'s: AV-LEC-WH AV-LEC-SV AV-LEC-BK

End caps are available in white, silver or black.

1015 E. Discovery Lane, Anaheim, CA 92801, Tel: 714.772.7005, Fax: 714.772.7014, Toll free in USA: 877.340.7633, info@tokistar.com

Transformers

LIGHTING SUPPLIER TO CONFIRM QUANTITY AND SIZE REQUIRED.

Magnetic Transformers

Tokistar magnetic transformers operate from a 120 VAC/60 Hz input and are fully dimmable. The 24 Volt secondary outputs have inherent circuit protection. Larger capacity transformers have magnetic breakers to prevent nuisance tripping. T24 Series and the C2-96-24V transformers are provided in enclosures rated Nema 3R. Transformers should be installed in an accessible location where there is free air circulation.

Part #	Outputs	H	W	D	Weight
C2-40-24V	1 @ 40 Watt	5.75"	2.25"	2.25"	2 lbs
C2-96-24V	1 @ 96 Watt	6.5"	3"	2.5"	3 lbs
T24-100	1 @ 100 Watt	9"	3"	3"	5 lbs
T24-150	1 @ 150 Watt	9"	3"	3"	5 lbs
T24-250	1 @ 250 Watt	9.5"	4.5"	3.5"	8 lbs
T24-300	1 @ 300 Watt	9.5"	4.5"	3.5"	8 lbs
T24-500	1 @ 500 Watt	10.5"	4.5"	4.5"	12 lbs
T24-600	1 @ 600 Watt	10.5"	4.5"	4.5"	15 lbs
T24-750	2 @ 375 Watt	10.5"	4.5"	4.5"	15 lbs
T24-1000	2 @ 500 Watt	11.5"	7"	5"	28 lbs
T24-1200	2 @ 600 Watt	11.5"	7"	5"	28 lbs

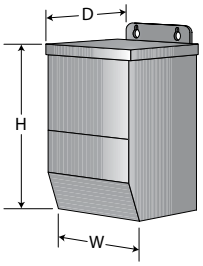

Sizes and weights shown are approximate and subject to change without notice.

Consult factory for transformers with inputs of 230 or 277 VAC.

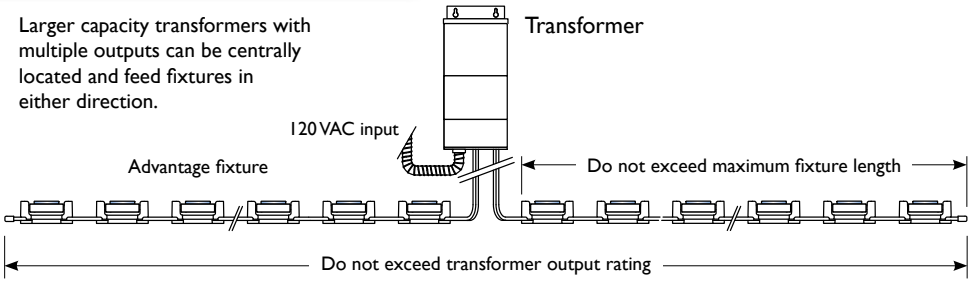

Dimming

All transformers are fully dimmable with the appropriate style of dimmer suitable for use with magnetic transformers. Although phase-control dimming might be convenient, some models may not function properly with LEDs at certain levels or loads. This is because a phase-control dimmer might not interpret an LED load as they do an incandescent load. Some dimming companies offer a "synthetic load" device to resolve this issue. Check with the dimmer manufacturer in such cases.

Optimum results of dimming LEDs are achieved by using PWM devices. In the most critical dimming applications, Advantage may be operated from Tokistar's LDR24-4A LED Driver in conjunction with our PWM dimming devices. Refer to pages 12 & 13 for more details on these options. For further information, visit our website and select Advantage Dimming Guidelines.

Maximum Fixture Length

The maximum load of each fixture must not exceed 480 Watts (20 amps @ 24 Volts). In addition to this limitation, consideration must be given to the affects of voltage drop. Fixtures with lower wattage lamps and more distant socket spacing have recommended maximum lengths less than 480 Watts.

	3 Watt/X3	5 Watt/X5	0.72 Watt LEDs
Maximum Lamps/Circuit	160 Lamps	96 Lamps	400 LEDs
Lamp Spacing	Maximum Lengths		
2.4" O.C. (60 mm)	32' (9.6 M)	19' (5.76 M)	80' (24 M)
3" O.C. (75 mm)	40' (12 M)	24' (7.2 M)	100' (30 M)
4" O.C. (100 mm)	48' (14.4 M)	32' (9.6 M)	133' (40 M)
6" O.C. (150 mm)	60' (18 M)	48' (14.4 M)	200' (60 M)

Secondary Lead Wire

The distance from the transformer to the fixture and the load of the fixture will determine the proper size of secondary wire. This chart provides recommended distance of the secondary circuit using #12 AWG based upon the loads shown.

Load/Watts	Length
120	60' (18.2 M)
240	30' (9.1 M)
360	20' (6 M)
480	15' (4.5 M)

Date: _____ Type: _____

Firm Name: _____

Project: _____

eW Fuse Powercore

1 ft (305 mm), 12.5 W / ft, 2700 K, 30° x 60° beam angle

Linear interior LED wall grazing fixture with solid white light

LIGHTING SUPPLIER TO FURNISH ROSCO GEL SLEEVE WITH PRE-CUT SLIT (COLOR TBD) TO CONTINUOUSLY COVER FIXTURE RUN LENGTH.

With narrow and medium beams of intense white light, eW Fuse Powercore is an excellent choice for a full range of surface grazing and wall-washing applications. Its ultra-compact form factor permits installation in tight spaces too small to accommodate conventional grazing fixtures. Meets or exceeds the performance of comparable linear fluorescent fixtures while lowering installation, energy, and maintenance costs. Offers environmentally-conscious buyers a green, energy-efficient grazing fixture with industry-leading light quality and quantity.

- Lower cost than comparable fluorescent grazing fixtures — With long useful source life and low-maintenance operation, eW Fuse Powercore represents a cost-effective alternative to traditional grazing fixtures.
- High-performance illumination and beam quality — eW Fuse Powercore is available in 1 ft (305 mm) and 4 ft (1.2 m) die-cast aluminum housings with a 10° x 60° or 30° x 60° beam angle. Interlocking connectors accommodate end-to-end placement without visible light scalloping between fixtures.
- Multiple color temperatures — Available in 2700 K, 3000 K, 3500 K, and 4000 K color temperatures for applications calling for warm, neutral, or cool white light
- Integrates patented Powercore technology — Powercore rapidly, efficiently, and accurately controls power directly from line voltage, eliminating the need for an external power supply. Contractor-friendly installation dramatically simplifies installation and lowers total system cost.
- Support for multiple voltages — Accepts power input of 100 – 277 VAC for consistent installation and operation from line voltage in a variety of locations.
- Dimming capability — Patented DIMand technology offers smooth dimming capability with selected commercially available reverse-phase ELV-type dimmers.
- Simple installation — Powercore integrated power management technology simplifies installation and allows long product runs. Easy-to-install 4 ft (1.2 m) mounting tracks allow quick project setup in linear applications.
- Easy mounting and positioning — With end-to-end locking power connectors that can make 180° turns, eW Fuse Powercore fixtures are easy to position in even the most challenging mounting circumstances. Fixtures rotate in 10° increments through 180° for precise aiming and color mixing. Optional mounting tracks support vertical and overhead positioning. 1 ft (305 mm) and 5 ft (1.5 m) jumper cables can add extra space between fixtures.

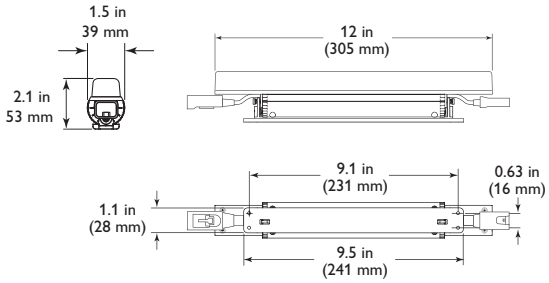

For detailed product information, please refer to the eW Fuse Powercore Product Guide at www.philipscolorkinetics.com/ls/essentialwhite/ewfusepc/

PHILIPS

Specifications

Due to continuous improvements and innovations, specifications may change without notice.

Item	Specification	Details
Output	Lumens†	573
	Efficacy (lm / W)	47.0
	CRI	82
	Lumen Maintenance‡	50,000 hours L70 @ 25° C 37,000 hours L70 @ 50° C 90,000 hours L50 @ 25° C 80,000 hours L50 @ 50° C
Electrical	Input Voltage	100 – 277 VAC, auto-switching, 50 / 60 Hz
	Power Consumption	13.5 W maximum at full output, steady state
	Power Factor	.99 @ 120 V
Control	Dimming	Compatible with selected commercially available reverse-phase ELV-type dimmers§
Physical	Dimensions *(Height x Width x Depth)*	2.1 x 12 x 1.5 in (53 x 305 x 39 mm)
	Weight	0.98 lbs (.45 kg)
	Housing	Die-cast aluminium, white powder-coated finish
	Lens	Polycarbonate
	Fixture Connections	Integral male / female connectors
	Temperature Ranges	-40° – 122° F (-40° – 50° C) Operating -4° – 122° F (-20° – 50° C) Startup -40° – 176° F (-40° – 80° C) Storage
	Humidity	0 – 95%, non-condensing
	Fixture Run Lengths	To calculate fixture run lengths and total power consumption for your specific installation, download the Configuration Calculator from www.philipscolorkinetics.com/support/install_tool/
Certification and Safety	Certification	UL / cUL, FCC, Class B, CE, C-Tick, CCC
	Environment	Dry / Damp Location, IP20

* Color temperatures conform to nominal CCTs as defined in ANSI Chromaticity Standard C78.377A.

† Lumen measurement complies with IES LM-79-08 testing procedures.

‡ L_{70} = 70% lumen maintenance (when light output drops below 70% of initial output). L_{50} = 50% lumen maintenance (when light output drops below 50% of initial output). Ambient luminaire temperatures specified. Lumen maintenance calculations are based on lifetime prediction graphs supplied by LED source manufacturers. Calculations for white-light LED fixtures are based on measurements that comply with IES LM-80-08 testing procedures. Refer to www.philipscolorkinetics.com/support/appnotes/lm-80-08.pdf for more information.

§ Refer to www.philipscolorkinetics.com/support/appnotes/ for specific details.

Accessories

Item	Type		Item Number	Philips 12NC
Leader Cable with terminator and strain relief	UL / cUL	10 ft (3 m)	108-000047-00	910503700972
	CE / CCC	10 ft (3 m)	108-000047-01	910503700973
Wiring Compartment with terminator	UL / cUL		120-000077-01	910503700994
Jumper Cable	UL / cUL	1 ft (305 mm)	108-000048-00	910503700974
		5 ft (1.5 m)	108-000048-01	910503700975
	CE / CCC	1 ft (305 mm)	108-000048-02	910503700976
		5 ft (1.5 m)	108-000048-03	910503700977
Terminators	10 / box		120-000099-00	910503701120
Mounting Track, White	Quantity 1	4 ft (1219 mm)	120-000124-00	910503701787

Photometrics

1 ft (305 mm), 12.5 W / ft, 2700 K, 30° x 60° beam angle

Polar Candela Distribution

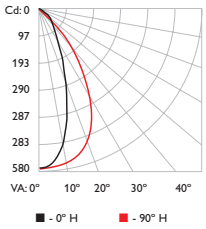

	0.0	22.5	45.0	67.5	90.0
0	573	573	573	573	573
5	557	559	565	568	571
15	367	391	459	518	540
25	179	200	269	385	431
35	92	96	127	206	264
45	55	55	59	69	82
55	36	32	30	27	31
65	25	21	16	15	18
75	16	13	9	8	8
85	9	8	6	4	2
90	8	7	5	3	1

Illuminance at Distance

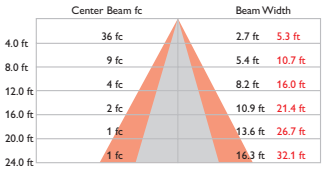

24.8 ft (7.6 m)
1 fc maximum distance

Vert. Spread: 37.6°
Horiz. Spread: 67.5°

Lumens	573
Efficacy	47.0 lm/W

For lux multiply fc by 10.7

OPTIBIN® CK TECHNOLOGY | POWERCORE® CK TECHNOLOGY | DIMAND™ CK TECHNOLOGY

Fixtures

Type	Beam Angle	Item Number	Philips 12NC
1 ft (305 mm) 2700 K	10° x 60°	523-000065-08	910503701717
	30° x 60°	523-000065-12	910503701721
1 ft (305 mm) 3000 K	10° x 60°	523-000065-09	910503701718
	30° x 60°	523-000065-13	910503701722
1 ft (305 mm) 3500 K	10° x 60°	523-000065-10	910503701719
	30° x 60°	523-000065-14	910503701723
1 ft (305 mm) 4000 K	10° x 60°	523-000065-11	910503701720
	30° x 60°	523-000065-15	910503701724
4 ft (1.2 m) 2700 K	10° x 60°	523-000065-16	910503702617
	30° x 60°	523-000065-20	910503702621
4 ft (1.2 m) 3000 K	10° x 60°	523-000065-17	910503702618
	30° x 60°	523-000065-21	910503702622
4 ft (1.2 m) 3500 K	10° x 60°	523-000065-18	910503702619
	30° x 60°	523-000065-22	910503702623
4 ft (1.2 m) 4000 K	10° x 60°	523-000065-19	910503702620
	30° x 60°	523-000065-23	910503702624

Use Item Number when ordering in North America.

PHILIPS

Philips Color Kinetics
3 Burlington Woods Drive
Burlington, Massachusetts 01803 USA
Tel 888.385.5742
Tel 617.423.9999
Fax 617.423.9998
www.philipscolorkinetics.com

Copyright © 2011 – 2013 Philips Solid-State Lighting Solutions, Inc. All rights reserved. Chromacore, Chromasic, CK, the CK logo, Color Kinetics, the Color Kinetics logo, ColorBlast, ColorBlaze, ColorBurst, ColorGraze, ColorPlay, ColorReach, iW Reach, eW Reach, eW Fuse, DIMand, EssentialWhite, eW, iColor, iColor Cove, IntelliWhite, iW, iPlayer, Optibin, and Powercore are either registered trademarks or trademarks of Philips Solid-State Lighting Solutions, Inc. in the United States and / or other countries. All other brand or product names are trademarks or registered trademarks of their respective owners. Due to continuous improvements and innovations, specifications may change without notice.

DAS-000079-02 R05 08-13

M O N O R A I L

MonoRail

DESCRIPTION
Low-voltage conductor of two individual conductive metal pieces fused together by a plastic separator. Hand-bendable, field-cuttable MonoRail is rated for 300 watts at 12 volts, 600 watts at 24 volts. Each piece of rail is shipped with conductive connectors to join rail pieces end to end. Order additional connectors if cutting and rejoining rails. Standard

WEIGHT
0.27-1.1lb / 0.12-0.5kg ±

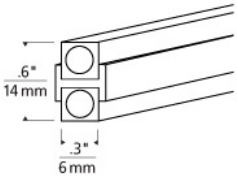

brown

LIGHTING SUPPLIER TO FURNISH WITH END CAPS, CONNECTORS, STANDOFFS, FEEDS AND TRACK LENGTHS AS REQUIRED BY LAYOUT.

COLOR OPTIONS

brown clear

ORDERING INFORMATION

700MOA SHAPE OR SIZE	LENGTH (A)	COLOR	FINISH
STRAIGHT	**24** 24" **48** 48" **96** 96"	**BR** BROWN CLEAR	**Z** ANTIQUE BRONZE **C** CHROME **S** SATIN NICKEL

TECH LIGHTING®
7400 Linder Avenue
Skokie, Illinois 60077
T 847.410.4400
F 847.410.4500

Tech Lighting, L.L.C.

700MOA ____ ____ ____ ____

FIXTURE TYPE: _____

JOB NAME: _____

NOTES: _____

©2014 Tech Lighting, L.L.C. All Rights Reserved. The "Tech Lighting" graphic is a registered trademark of Tech Lighting, L.L.C.
Tech Lighting reserves the right to change specifications for product improvements without notification.

M O N O R A I L

Remote Transformer-300W Mag 12v

LED

DESCRIPTION
This remote magnetic transformer converts standard 120 or 277 volt line-voltage to 12 volts, providing the necessary voltage for powering a MonoRail, Kable Lite, Wall MonoRail or FreeJack low-voltage lighting system. This remote magnetic transformer can be used to power lamps totaling up to 300 watts. This transformer is equipped with fast-acting secondary circuit breaker that will safely turn off the system should a short occur. Once the short has been removed the breaker can be reset.

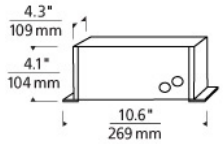

INSTALLATION
This transformer must be installed in a remote but accessible location (such as above the ceiling or in a closet). To simplify installation the transformer should be located no more than 20' from the run or power feed. The electrician will need to supply the proper gauge conductor from the transformer to the power feed location based on distance (see Low-Voltage Wire Size Table, below).

OTHER
Input Wiring: Can be ordered to hard wire to a junction box or to plug in with 16' power cord with plug. This transformer provides a single 300 watt output and must be used with a single-feed canopy or other power feed option (sold separately). 12 volt output transformers require the use of 12 volt lamps.

LIGHTING SUPPLIER TO CONFIRM QUANTITY AND SIZE REQUIRED.

LOW-VOLTAGE WIRE SIZE TABLE
Use to determine the correct THHN wire size for a recommended 3 percent drop in voltage at the specified wattage. The length shown is the length of wire from the transformer to the power feed.

12 Volt	5 ft.	6-15 ft.	16-20 ft.	21-40 ft.	41-60 ft.	61-90 ft.
300 Watt	#10 GA	#6 GA	#4 GA	#1 GA	1/0	3/0

WEIGHT
8.41lb / 3.81kg ±

ORDERING INFORMATION

700AT300 VOLTAGE

T 120V IN/12V OUT
T277 277V IN/12V OUT

As a general rule when using LED fixtures we do not recommend using greater than 70% of specified maximum wattage on the transformer due to inrush current. for assistance, please contact our technical support department.

TECH LIGHTING®
7400 Linder Avenue
Skokie, Illinois 60077
T 847.410.4400
F 847.410.4500
Tech Lighting, L.L.C.

700AT300 ____

FIXTURE TYPE: _____
JOB NAME: _____
NOTES: _____

©2014 Tech Lighting, L.L.C. All Rights Reserved. The "Tech Lighting" graphic is a registered trademark of Tech Lighting, L.L.C.
Tech Lighting reserves the right to change specifications for product improvements without notification.

L O W - V O L T A G E H E A D S

LIGHTING SUPPLIER TO FURNISH:
(1) HEXCELL LOUVER
(1) SPREAD LENS (SPREAD TBD)
(1) ROSCO DICHROIC COLOR FILTER
(COLOR TBD) - REFER TO "DICHRO" CUT

Tellium Head

DESCRIPTION
Simple, industrial-inspired head puts light where you need it. Machined aluminum and brass housings create crisp edges. Head rotates 360°; pivots 90° to direct the beam. Integrated lens holder accommodates up to two lenses or louvers (sold separately). Accepts low-voltage, MR16 lamp of up t o 50 watts (not included).

INSTALLATION
Socket terminates with FreeJack male connector, which may be installed into a system connector. Elements ordered with a system prefix include a connector for that system.

ACCESSORIES & OPTICAL CONTROLS
Colored Lens, Dichroic Lens, Diffuser Lens, Eggcrate Louver, Linear Spread Lens, Soft Focus Lens, UV Filter

WEIGHT
1.03lb / 0.47kg ±

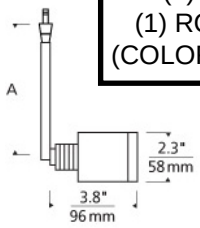

ORDERING INFORMATION

700 SYSTEM	TLM	LENGTH (A)	FINISH
FJ FREEJACK		**03** 3"	**Z** ANTIQUE BRONZE
MP MONOPOINT		**06** 6"	**S** SATIN NICKEL
MO MONORAIL		**12** 12"	
MO2 TWO-CIRCUIT MONORAIL		**18** 18"	

Note: MP includes 4" Round Flush Canopy.

TECH LIGHTING®

7400 Linder Avenue
Skokie, Illinois 60077
T 847.410.4400
F 847.410.4500

Tech Lighting, L.L.C.

700 ____ TLM ____ ____

FIXTURE TYPE: _____

JOB NAME: _____

NOTES: _____

_____

_____

©2014 Tech Lighting, L.L.C. All Rights Reserved. The "Tech Lighting" graphic is a registered trademark of Tech Lighting, L.L.C.
Tech Lighting reserves the right to change specifications for product improvements without notification.

LAMPING: (1) 12W MAXIMUM 2,700K LED MR16 REPLACEMENT LAMP - SPOT BEAM SPREAD - MINIMUM 400 LUMENS AND 5600 CBCP.

EXACT SPECIFICATION TO BE CONFIRMED AT TIME OF PURCHASE BASED ON CURRENT TECHNOLOGY AND MARKET AVAILABILITY.

LIGHTING SUPPLIER WILL NEED TO FURNISH SAMPLE OF FIXTURE WITH LAMP FOR REVIEW OF DIMMING AND COLOR TEMPERATURE BY OWNER, ARCHITECT, AND LIGHTING DESIGNER PRIOR TO FINALIZING SPECIFICATION.

SPECIFICATION SHEET PAGE 1/2

T3450W

3 1/2" Series

Project
Notes
Fixture Type
Date

Low Profile Adjustable Wall Wash Trim

T3450W-11
(illustrated)

SPECIFICATIONS

TRIM	Powder coat painted or plated die-formed steel. Different finishes available. Painted finishes available with Marine Grade option.
LAMPS	**MR16** 20-50W **GU/GZ-10** 50W This product was designed for MR16 halogen lamps or GU/GZ-10. If you want to use the dimming option and you replace the MR16 or GU/GZ-10 lamp by an equivalent LED lamp, please see dimmer compatibility list on our Website.
REFLECTOR	**Standard: Anodized Aluminum** Available:

Anodized	**Specular**	**Painted**
Azure **(AZ)**	Black **(BK)**	White **(-01)**
Burnt Orange **(BO)**	Champagne **(CH)**	Black **(-02)**
Cobalt Blue **(CB)**	Clear **(CL)**	Matte White **(-11)**
Inca Gold **(IG)**		
Ruby **(RU)**		

CEILING CUTOUT	**Ø 3 5/8" (92 mm)**

COMPATIBLE HOUSINGS	**Remodel Housing**	**New Construction Housing**	**Insulated Housing**
	50W MR16 GU 5.3 IT3000LE IT3000LM	**50W MR16 GU 5.3** NW3000CE NW3000CM NW3000LE NW3000LM **50W GU/GZ-10** NW3000LT	**20W MR16 GU 5.3** ISMR3000E20 ISMR3000M20 **35W MR16 GU 5.3** ISMR3000E35 ISMR3000M35 **50W MR16 GU 5.3** ISMR3000M **50W GU/GZ-10** ISMR3000T

CERTIFICATION	cULus **E174023** for **damp locations**
WARRANTY	1 year for standard finishes, 2-year on "Marine Grade" finish.

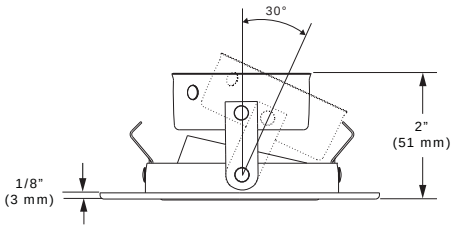

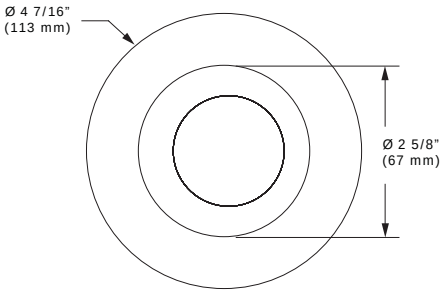

c UL us LISTED

MADE IN CANADA

CONTRAST LIGHTING

CONTRAST LIGHTING M. L. INC.
1009 RUE DU PARC-INDUSTRIEL
ST-JEAN-CHRYSOSTOME QC G6Z 1C5
CANADA

Tel: 1-888-839-4624
Fax: 1-877-839-7057
info@contrastlighting.com
www.contrastlighting.com

2014-04

SPECIFICATION SHEET PAGE 2/2

T3450W

3 1/2" Series

LIGHTING SUPPLIER TO FURNISH:
(1) HEXCELL LOUVER
(1) SPREAD LENS (SPREAD TBD)
(1) ROSCO DICHROIC COLOR FILTER
(COLOR TBD) - REFER TO "DICHRO" CUT

CODIFICATION EXAMPLE

T3450W-11BKMG

- T3450W → MODEL
- 11 → FINISH
- BK → REFLECTOR
- MG → MARINE GRADE OPTION

LAMPING: (1) 12W MAXIMUM 2,700K LED MR16 REPLACEMENT LAMP - SPOT BEAM SPREAD - MINIMUM 400 LUMENS AND 5600 CBCP.

EXACT SPECIFICATION TO BE CONFIRMED AT TIME OF PURCHASE BASED ON CURRENT TECHNOLOGY AND MARKET AVAILABILITY.

LIGHTING SUPPLIER WILL NEED TO FURNISH SAMPLE OF FIXTURE WITH LAMP FOR REVIEW OF DIMMING AND COLOR TEMPERATURE BY OWNER, ARCHITECT, AND LIGHTING DESIGNER PRIOR TO FINALIZING SPECIFICATION.

ORDERING CODE

MODEL	TRIM FINISH		REFLECTOR		MARINE GRADE
T3450W					
T3450W	**-01**	White	**ANODIZED**		**MG** (optional)
	-02	Black	**...**	Aluminum (standard)	May be applied on finishes:
	-03	Gold Plated 24K	**AZ**	Azur	-01, -02, -05, -06, -11
	-04	Chrome	**BO**	Burnt Orange	and -15.
	-04BR	Brushed Chrome	**IG**	Inca Gold	
	-05	Architectural Bronze	**RU**	Ruby	
	-06	Antique Copper	**CB**	Cobalt Blue	
	-08	Antique Sliver			
	-11	Matte White	**SPECULAR**		
	-12BR	Brushed Nickel	**CL**	Clear	
	-13	Satin Nickel	**BK**	Black	
	-14	Almond	**CH**	Champagne	
	-15	Metallic Grey			
	-16	Satin Chrome	**PAINTED**		
			-01	White	
			-02	Black	
			-11	Matte White	

MARINE GRADE - Unless otherwise indicated, trims are for interior, cold and exterior locations where fixtures are not subject to direct rain or snow exposure as in soffits. MARINE GRADE treatment is recommended for exterior, shower and high salinity environment.

c UL us LISTED

MADE IN CANADA

CONTRAST LIGHTING

CONTRAST LIGHTING M. L. INC.
1009 RUE DU PARC-INDUSTRIEL
ST-JEAN-CHRYSOSTOME QC G6Z 1C5
CANADA

Tel: 1-888-839-4624
Fax: 1-877-839-7057
info@contrastlighting.com
www.contrastlighting.com

2014-04

SPECIFICATION SHEET

3 1/2" 3000 SERIES

NW3000CM

NW3000CM2
NW3000CM3

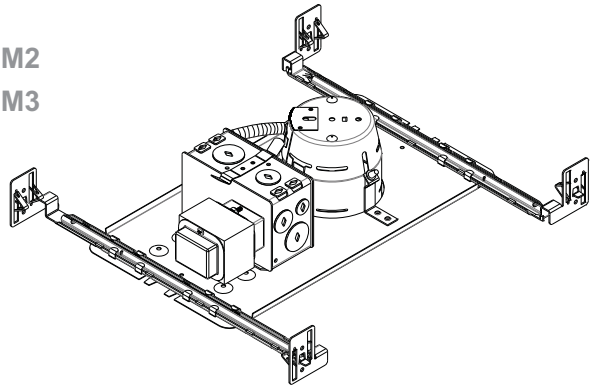

SHORT NEW CONSTRUCTION HOUSING WITH MAGNETIC TRANSFORMER

Damp Location	YES
MR16	MR16 50W MAX
Voltage	NW3000CM : 120 Volts (CAN & USA) NW3000CM2 : 277 Volts (USA) NW3000CM3 : 347 Volts (CANADA)
	Magnetic Transformer: EC50M 50 VA 120V / 12V EC50M2 50 VA 277V / 12V EC50M3 50 VA 347V / 12V
	Thermal Protector: T°C 130°C No 033
OD Cut	3 5/8" (92 mm)
LISTED	E174023
Dimensions	Overall Dimensions: Length: 13 1/2" (343 mm) | With bars: 15 3/8" (391 mm) Width: 7 3/8" (187 mm) | With bars: min 10" (254 mm) Height: 3 7/16" (94 mm)

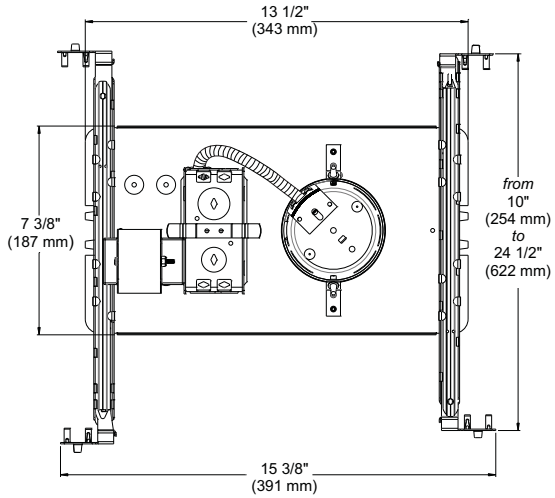

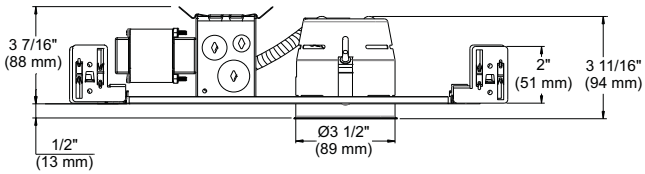

COMPATIBLE TRIMS

37W MR16			50W MR16		
R3152	S3151	T3145DG	R3151	T3145D ST	T3450D SM
R3171	S3400	T3152	R3151K	T3145W	T3450D ST
R3450D	S3400D	T3250DG	R3151W	T3165	T3450K
R3470	S3450	T3602	R3151WK	T3185	T3450W
R3470D	S3450D	T3652	R3601	T3200	T3450WK
R3602	S3500	T3671	R3601W	T3250	T3500
R3652	S3500D	T3700	R3651	T3260	T3500D SM
S3145	S3601	T3800	R3651W	T3300	T3500D ST
S3145D	S3651	T3850	T3000	T3400	T3500W
		T3900	T3100	T3400D SM	T3600
			T3125	T3400D ST	T3650
			T3145	T3400W	
			T3145D SM	T3450	

TECHNICAL SPECIFICATIONS

0.051"(1.3 mm) thickness galvanized steel
Below-ceiling accessible
Hooks: #CAN 2,088,648 and #USA 5,377,088 5,377,088
Installs on ceiling up to 7/8" thick
Perfect fit into ceiling
No light leakage

MADE IN CANADA

LISTED
Certified UL Standards

Your representative :_____

Your project :_____

CONTRAST LIGHTING INC.
1009, rue du Parc Industriel, Saint-Jean-Chrysostome QC G6Z 1C5, CANADA Tel: 1-888-839-4624 Fax: 1-877-839-7057
info@contrastlighting.com
www.contrastlighting.com

2012-11

LIGHTING SUPPLIER TO FURNISH:
(1) SPREAD LENS (SPREAD TBD)
(1) ROSCO DICHROIC COLOR FILTER
(COLOR TBD) - REFER TO "DICHRO" CUT

SPECIFICATION SHEET

3 1/2" 3000 SERIES

S3450D

LAMPING: (1) 12W MAXIMUM 2,700K LED MR16 REPLACEMENT LAMP - SPOT BEAM SPREAD - MINIMUM 400 LUMENS AND 5600 CBCP.

EXACT SPECIFICATION TO BE CONFIRMED AT TIME OF PURCHASE BASED ON CURRENT TECHNOLOGY AND MARKET AVAILABILITY.

LIGHTING SUPPLIER WILL NEED TO FURNISH SAMPLE OF FIXTURE WITH LAMP FOR REVIEW OF DIMMING AND COLOR TEMPERATURE BY OWNER, ARCHITECT, AND LIGHTING DESIGNER PRIOR TO FINALIZING SPECIFICATION.

LOW PROFILE ADJUSTABLE SHOWER TRIM WITH FROSTED LENS

Wet Location	**YES**
MR16	**20-50W**
GU/GZ-10	**YES***
Reflector	DOES NOT APPLY
	Insulated ceiling housing ISMR3000E20, ISMR3000M20, ISMR3000M, ISMR3000E35, ISMR3000M35
	New construction housing NW3000CE, NW3000CM, NW3000LE, NW3000LM NW3000LT*
	Remodel housing IT3000LE, IT3000LM
FC C F Lenses	**Standard : Frosted lens** Available : Clear lens (**C**), Frosted with clear center lens (**FC**). To order, place the lens code after the trim code. Ex. : S3450D**FC**-01

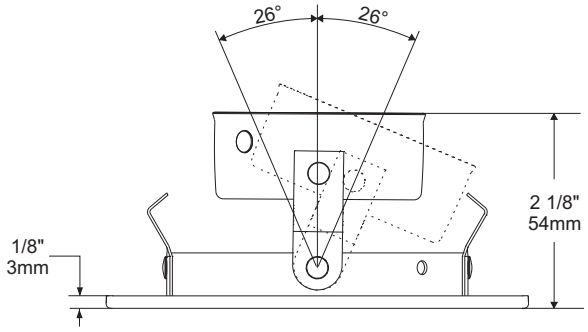

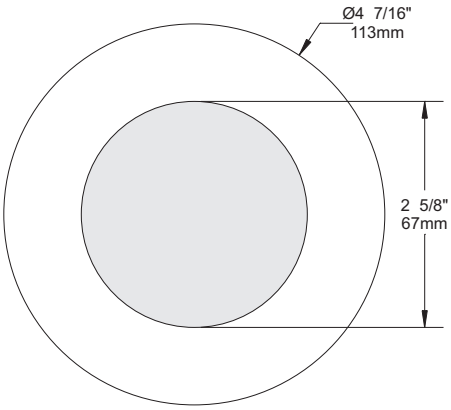

COMPATIBLE HOUSINGS

50W GU-GZ/10	50W MR16	37W MR16	35W MR16	20W MR16
NW3000LT*	IT3000LE IT3000LM NW3000LE NW3000LM	NW3000CE NW3000CM	ISMR3000M	ISMR3000E20 ISMR3000M20

TRIM FINISHES

-01 WHITE
-02 BLACK
-03 24K GOLD
-04 CHROME
-04BR BRUSHED CHROME
-05 ARCHITECTURAL BRONZE
-06 ANTIQUE COPPER
-07 ANTIQUE BRASS
-08 ANTIQUE SILVER
-11 MATTE WHITE
-12BR BRUSHED NICKEL
-13 SATIN NICKEL
-14 ALMOND

Unless otherwise indicated, trims are for **interior use only**. For exterior use and up to wet conditions, **MARINE GRADE** treatment is **recommended.** Available for finishes -01, -02, -05, -06, -11 and -14 only.

c UL us LISTED
Certified UL Standards

Project _____

Representative _____

CONTRAST LIGHTING
1009, rue du Parc Industriel, Saint-Jean-Chrysostome, Qc, CAN G6Z 1C5 Tel.: 1-888-839-4624 Fax : 1-877-839-7057
info@contrastlighting.com
www.contrastlighting.com

MARCH 2010

SPECIFICATION SHEET

3 1/2" 3000 SERIES

NW3000CM

NW3000CM2
NW3000CM3

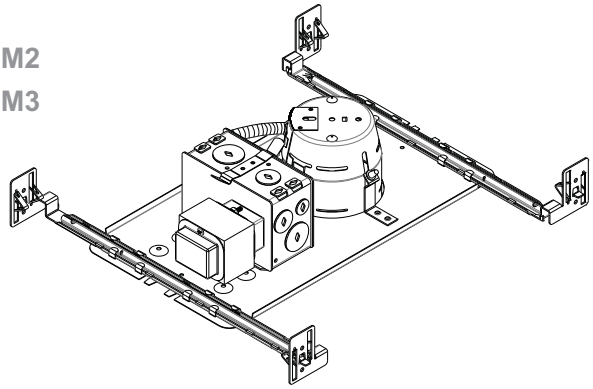

SHORT NEW CONSTRUCTION HOUSING WITH MAGNETIC TRANSFORMER

Damp Location	YES
MR16	MR16 50W MAX
Voltage	NW3000CM : 120 Volts (CAN & USA) NW3000CM2 : 277 Volts (USA) NW3000CM3 : 347 Volts (CANADA)
	Magnetic Transformer: EC50M 50 VA 120V / 12V EC50M2 50 VA 277V / 12V EC50M3 50 VA 347V / 12V
	Thermal Protector: T°C 130°C No 033
OD Cut	3 5/8" (92 mm)
LISTED	E174023
Dimensions	Overall Dimensions: Length: 13 1/2" (343 mm) | With bars: 15 3/8" (391 mm) Width: 7 3/8" (187 mm) | With bars: min 10" (254 mm) Height: 3 7/16" (94 mm)

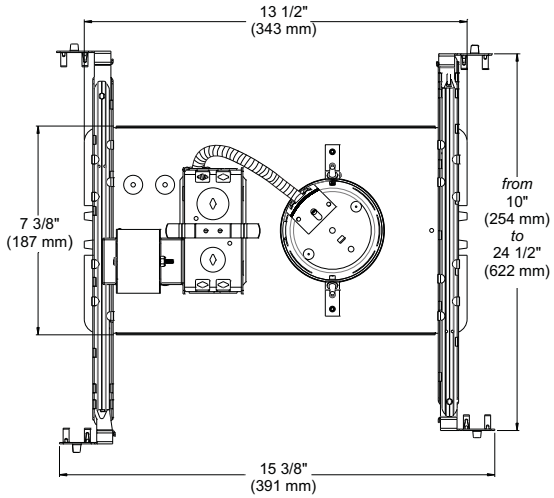

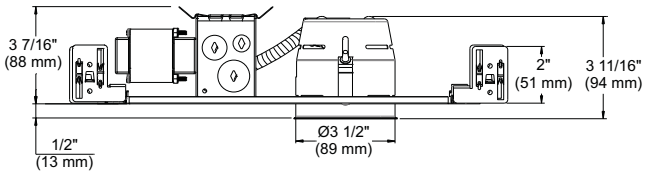

COMPATIBLE TRIMS

37W MR16			50W MR16		
R3152	S3151	T3145DG	R3151	T3145D ST	T3450D SM
R3171	S3400	T3152	R3151K	T3145W	T3450D ST
R3450D	S3400D	T3250DG	R3151W	T3165	T3450K
R3470	S3450	T3602	R3151WK	T3185	T3450W
R3470D	S3450D	T3652	R3601	T3200	T3450WK
R3602	S3500	T3671	R3601W	T3250	T3500
R3652	S3500D	T3700	R3651	T3260	T3500D SM
S3145	S3601	T3800	R3651W	T3300	T3500D ST
S3145D	S3651	T3850	T3000	T3400	T3500W
		T3900	T3100	T3400D SM	T3600
			T3125	T3400D ST	T3650
			T3145	T3400W	
			T3145D SM	T3450	

TECHNICAL SPECIFICATIONS

0.051"(1.3 mm) thickness galvanized steel
Below-ceiling accessible
Hooks: #CAN 2,088,648 and #USA 5,377,088 5,377,088
Installs on ceiling up to 7/8" thick
Perfect fit into ceiling
No light leakage

MADE IN CANADA

LISTED
Certified UL Standards

Your representative :_____

Your project :_____

CONTRAST LIGHTING INC.
1009, rue du Parc Industriel, Saint-Jean-Chrysostome QC G6Z 1C5, CANADA Tel: 1-888-839-4624 Fax: 1-877-839-7057
info@contrastlighting.com
www.contrastlighting.com

2012-11

SPECIFICATION SHEET PAGE 1/2

T3450

3 1/2" Series

Project
Notes
Fixture Type
Date

Low Profile Regressed Trim

T3450-12BR
(illustrated)

SPECIFICATIONS

TRIM	Powder coat painted or plated die-formed steel. Different finishes available. Painted finishes available with Marine Grade option.
LAMPS	**MR16** 20-50W **GU/GZ-10** 50W **GX10** 20W HID (High Intensity Discharge) This product was designed for MR16 halogen lamps or GU/GZ-10. If you want to use the dimming option and you replace the MR16 or GU/GZ-10 lamp by an equivalent LED lamp, please see dimmer compatibility list on our Website.
REFLECTOR	**Standard: Anodized Aluminum** Available: **Anodized**: Azure **(AZ)**, Burnt Orange **(BO)**, Cobalt Blue **(CB)**, Inca Gold **(IG)**, Ruby **(RU)** **Specular**: Black **(BK)**, Champagne **(CH)**, Clear **(CL)** **Painted**: White **(-01)**, Black **(-02)**, Matte White **(-11)**
CEILING CUTOUT	**Ø 3 5/8" (92 mm)**
COMPATIBLE HOUSINGS	**Remodel Housing**: **50W MR16 GU 5.3** IT3000E IT3000M IT3000LE IT3000LM **50W GU/GZ-10** IT3000LT **20W GX10 (HID)** MH3000GX120 **New Construction Housing**: **50W MR16 GU 5.3** NW3000CE NW3000CM NW3000LE NW3000LM NWD3000LE NWT3000LE **50W GU/GZ-10** NW3000LT **Insulated Housing**: **20W MR16 GU 5.3** ISMR3000E20 ISMR3000M20 **35W MR16 GU 5.3** ISMR3000E35 ISMR3000M35 **50W MR16 GU 5.3** ISMR3000M **50W GU/GZ-10** ISMR3000T
CERTIFICATION	cULus **E174023** for **damp locations**
WARRANTY	1 year for standard finishes, 2-year on "Marine Grade" finish

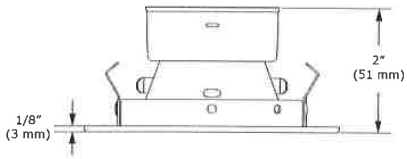

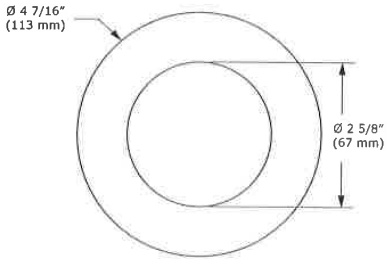

c UL us LISTED

MADE IN CANADA

CONTRAST LIGHTING

CONTRAST LIGHTING M. L. INC.
1009 RUE DU PARC-INDUSTRIEL
ST-JEAN-CHRYSOSTOME QC G6Z 1C5
CANADA

Tel: 1-888-839-4624
Fax: 1-877-839-7057
info@contrastlighting.com
www.contrastlighting.com

2014-04

SPECIFICATION SHEET PAGE 2/2

T3450

3 1/2" Series

LIGHTING SUPPLIER TO FURNISH:
(1) HEXCELL LOUVER
(1) SPREAD LENS (SPREAD TBD)
(1) ROSCO DICHROIC COLOR FILTER (COLOR TBD) - REFER TO "DICHRO" CUT

LAMPING: (1) 12W MAXIMUM 2,700K LED MR16 REPLACEMENT LAMP - SPOT BEAM SPREAD - MINIMUM 400 LUMENS AND 5600 CBCP.

EXACT SPECIFICATION TO BE CONFIRMED AT TIME OF PURCHASE BASED ON CURRENT TECHNOLOGY AND MARKET AVAILABILITY.

LIGHTING SUPPLIER WILL NEED TO FURNISH SAMPLE OF FIXTURE WITH LAMP FOR REVIEW OF DIMMING AND COLOR TEMPERATURE BY OWNER, ARCHITECT, AND LIGHTING DESIGNER PRIOR TO FINALIZING SPECIFICATION.

CODIFICATION EXAMPLE

T3450-11BKMG

MODEL — FINISH — REFLECTOR — MARINE GRADE OPTION

ORDERING CODE

MODEL	TRIM FINISH		REFLECTOR		MARINE GRADE
T3450					
T3450	**-01**	White	**ANODIZED**		**MG** (optional)
	-02	Black	**...**	Aluminum (standard)	May be applied on finishes:
	-03	Gold Plated 24K	**AZ**	Azur	-01, -02, -05, -06, -11
	-04	Chrome	**BO**	Burnt Orange	and -15.
	-04BR	Brushed Chrome	**IG**	Inca Gold	
	-05	Architectural Bronze	**RU**	Ruby	
	-06	Antique Copper	**CB**	Cobalt Blue	
	-08	Antique Sliver			
	-11	Matte White	**SPECULAR**		
	-12BR	Brushed Nickel	**CL**	Clear	
	-13	Satin Nickel	**BK**	Black	
	-14	Almond	**CH**	Champagne	
	-15	Metallic Grey			
	-16	Satin Chrome	**PAINTED**		
			-01	White	
			-02	Black	
			-11	Matte White	

MARINE GRADE - Unless otherwise indicated, trims are for interior, cold and exterior locations where fixtures are not subject to direct rain or snow exposure as in soffits. MARINE GRADE treatment is recommended for exterior, shower and high salinity environment.

c UL us LISTED

MADE IN CANADA

CONTRAST LIGHTING

CONTRAST LIGHTING M. L. INC.
1009 RUE DU PARC-INDUSTRIEL
ST-JEAN-CHRYSOSTOME QC G6Z 1C5
CANADA

Tel: 1-888-839-4624
Fax: 1-877-839-7057
info@contrastlighting.com
www.contrastlighting.com

2014-04

SPECIFICATION SHEET

3 1/2" 3000 SERIES

NW3000CM

NW3000CM2
NW3000CM3

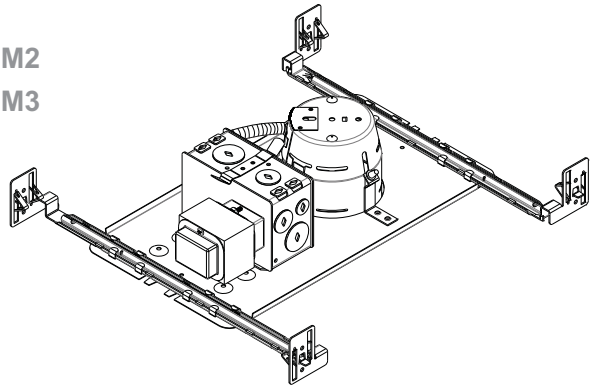

SHORT NEW CONSTRUCTION HOUSING WITH MAGNETIC TRANSFORMER

Damp Location	YES
MR16	MR16 50W MAX
Voltage	NW3000CM : 120 Volts (CAN & USA) NW3000CM2 : 277 Volts (USA) NW3000CM3 : 347 Volts (CANADA)
	Magnetic Transformer: EC50M 50 VA 120V / 12V EC50M2 50 VA 277V / 12V EC50M3 50 VA 347V / 12V
	Thermal Protector: T°C 130°C No 033
OD Cut	3 5/8" (92 mm)
LISTED	E174023
Dimensions	Overall Dimensions: Length: 13 1/2" (343 mm) | With bars: 15 3/8" (391 mm) Width: 7 3/8" (187 mm) | With bars: min 10" (254 mm) Height: 3 7/16" (94 mm)

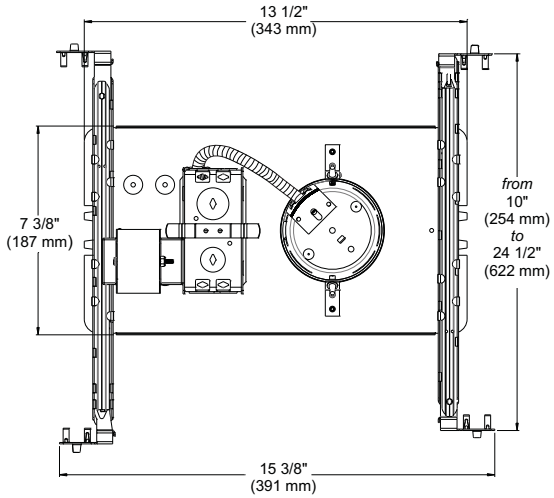

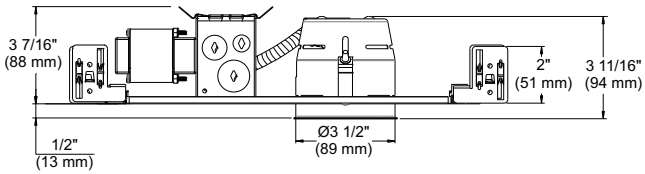

COMPATIBLE TRIMS

37W MR16			50W MR16		
R3152	S3151	T3145DG	R3151	T3145D ST	T3450D SM
R3171	S3400	T3152	R3151K	T3145W	T3450D ST
R3450D	S3400D	T3250DG	R3151W	T3165	T3450K
R3470	S3450	T3602	R3151WK	T3185	T3450W
R3470D	S3450D	T3652	R3601	T3200	T3450WK
R3602	S3500	T3671	R3601W	T3250	T3500
R3652	S3500D	T3700	R3651	T3260	T3500D SM
S3145	S3601	T3800	R3651W	T3300	T3500D ST
S3145D	S3651	T3850	T3000	T3400	T3500W
		T3900	T3100	T3400D SM	T3600
			T3125	T3400D ST	T3650
			T3145	T3400W	
			T3145D SM	T3450	

TECHNICAL SPECIFICATIONS

0.051"(1.3 mm) thickness galvanized steel
Below-ceiling accessible
Hooks: #CAN 2,088,648 and #USA 5,377,088 5,377,088
Installs on ceiling up to 7/8" thick
Perfect fit into ceiling
No light leakage

MADE IN CANADA

LISTED
Certified UL Standards

Your representative :_____

Your project :_____

CONTRAST LIGHTING
1009, rue du Parc Industriel, Saint-Jean-Chrysostome QC G6Z 1C5, CANADA Tel: 1-888-839-4624 Fax: 1-877-839-7057
info@contrastlighting.com
www.contrastlighting.com

2012-11

BARBECUE LIGHTS
BQ-08 SERIES

TYPE

SPECIFICATIONS

CONSTRUCTION:

FIXTURE: Cast 316 stainless steel or aluminum Bullet; (consult factory for brass options)

FLEX ARM: 24" Stainless steel flex arm, (36" model available with 12" stainless steel extension)
Clear polyolefin shrink cover on stainless steel (-SS) models;
Black polyolefin shrink cover on aluminum (-BLT) models

MOUNT: Cast stainless steel or aluminum deck mount canopy on Flex Deck (-FD) models;
Heavy duty stainless steel C-Clamp with 6" plastic T-Handle on Flex Clamp (-FC) models

SWITCH: On/Off push button with weatherproof rubber boot cover

LENS: High impact clear tempered flat glass

O-RING: High temperature red silicone

FINISH: Aluminum - Black texture polyester powder coat. Optional finishes available.
Stainless Steel - Brushed

12v ELECTRICAL SPECIFICATIONS:

LAMP SUPPLIED: 20w MR16 FL(BAB) 5000 hours average rating (35w max)

SOCKET: High temperature ceramic GU5.3 bi-pin with 250°C silicone lead wires

WIRING: Black 7 foot 18/2 zip cord from base of fixture
For 25 foot 16/2 fixture lead wire add **-25F** to catalog number

120v ELECTRICAL SPECIFICATIONS:

LAMP SUPPLIED: 35w MR16 (30°) med. base, 2000 hours average rating (35w max)

SOCKET: High temperature ceramic medium base with 250°C silicone lead wires

WIRING: Standard Black, White and Ground 9" lead wires on Flex Deck (-FD) models;
9 foot black SJT-WA grounded power cord on Flex Clamp (-FC) models

18,000 HOUR MR16 T TITAN RECOMMENDED
10,000 HOUR MR16 U ULTRA RECOMMENDED

BQ-08-FD-SS

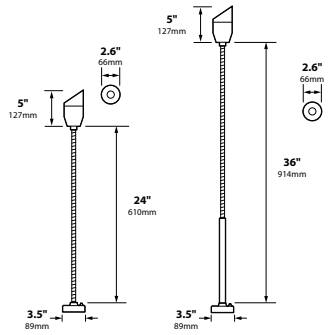

BQ-08-FD BQ-08-FD36

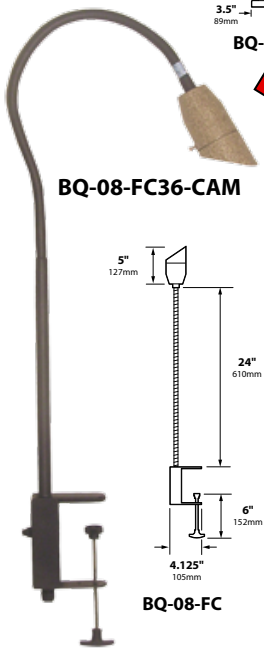

BQ-08-FC36-CAM

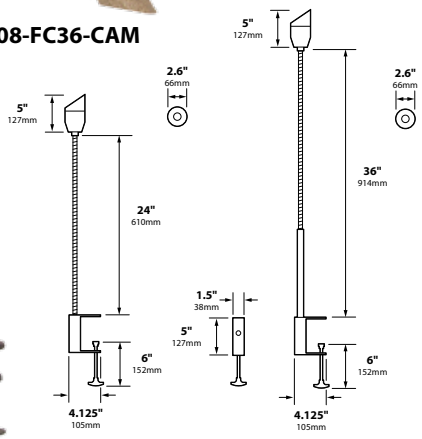

BQ-08-FC BQ-08-FC36

ORDERING INFORMATION

CATALOG NO.	DESCRIPTION	LAMP	SHIP WEIGHT
12v			
BQ-08-FC-BLT	Cast Aluminum BBQ Light, Flex Clamp with 24" Flex Arm	20w MR16 FL(BAB)	4.0 lbs.
BQ-08-FC-SS	316 Stainless Steel BBQ Light, Flex Clamp with 24" Flex Arm	20w MR16 FL(BAB)	4.0 lbs.
BQ-08-FC36-BLT	Cast Aluminum BBQ Light, Flex Clamp with 36" Flex Arm	20w MR16 FL(BAB)	5.0 lbs.
BQ-08-FC36-SS	316 Stainless Steel BBQ Light, Flex Clamp with 36" Flex Arm	20w MR16 FL(BAB)	5.0 lbs.
BQ-08-FD-BLT	Cast Aluminum BBQ Light, Flex Deck with 24" Flex Arm	20w MR16 FL(BAB)	4.0 lbs.
BQ-08-FD-SS	316 Stainless Steel BBQ Light, Flex Deck with 24" Flex Arm	20w MR16 FL(BAB)	4.0 lbs.
BQ-08-FD36-BLT	Cast Aluminum BBQ Light, Flex Deck with 36" Flex Arm	20w MR16 FL(BAB)	5.0 lbs.
BQ-08-FD36-SS	316 Stainless Steel BBQ Light, Flex Deck with 36" Flex Arm	20w MR16 FL(BAB)	5.0 lbs.
120v			
BQ-08-FC-MR16120V-BLT	Cast Aluminum BBQ Light, Flex Clamp with 24" Flex Arm	35w MR16 30°	4.0 lbs.
BQ-08-FC-MR16120V-SS	316 Stainless Steel BBQ Light, Flex Clamp with 24" Flex Arm	35w MR16 30°	4.0 lbs.
BQ-08-FC-MR16120V36-BLT	Cast Aluminum BBQ Light, Flex Clamp with 36" Flex Arm	35w MR16 30°	5.0 lbs.
BQ-08-FC-MR16120V36-SS	316 Stainless Steel BBQ Light, Flex Clamp with 36" Flex Arm	35w MR16 30°	5.0 lbs.
BQ-08-FD-MR16120V-BLT	Cast Aluminum BBQ Light, Flex Deck with 24" Flex Arm	35w MR16 30°	4.0 lbs.
BQ-08-FD-MR16120V-SS	316 Stainless Steel BBQ Light, Flex Deck with 24" Flex Arm	35w MR16 30°	4.0 lbs.
BQ-08-FD36-MR16120V-BLT	Cast Aluminum BBQ Light, Flex Deck with 36" Flex Arm	35w MR16 30°	5.0 lbs.
BQ-08-FD36-MR16120V-SS	316 Stainless Steel BBQ Light, Flex Deck with 36" Flex Arm	35w MR16 30°	5.0 lbs.

IP54 CE ETL LISTED

JOB INFORMATION

Type: Date:

Job Name:

Cat. No.:

Lamp(s):

Specifier:

Contractor:

Notes:

FOCUS INDUSTRIES INC.
25301 COMMERCENTRE DRIVE
LAKE FOREST, CA 92630
www.focusindustries.com
sales@focusindustries.com
(949) 830-1350 • FAX (949) 830-3390

Black Texture (Standard)	Antique Verde	Bronze Texture	Camel	White Texture	Hunter Texture	Rust	Weathered Iron	Weathered Brown	Stucco	Rubbed Verde	Chrome Powder	Terra Cotta	Acid Rust	Acid Verde	Black Acid Treatment
-BLT	*-ATV*	*-BRT*	*-CAM*	*-WTX*	*-HTX*	*-RST*	*-WIR*	*-WBR*	*-STU*	*-RBV*	*-CPR*	*-TRC*	*-BAR/CAR*	*-BAV/CAV*	*-BAT*

BRASS & COPPER ONLY

BQ-08-FC_FD Cut Sheet 121211

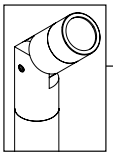

ArtiStar™
BKSSL SOLID STATE LIGHTING
Integral Transformer

the power of with adjust-e-lume® TECHNOLOGY

INTEGRAL ARTISTAR™

PROJECT:	
TYPE:	
CATALOG NUMBER:	
SOURCE:	
NOTES:	

LIGHTING SUPPLIER TO CONFIRM FINISH WITH DESIGN ARCHITECT PRIOR TO ORDERING.

CATALOG NUMBER LOGIC

			AR		LED		TR								
Example	B	-	AR	-	LED	-	TR	-	e22	-	NSP	-	A9	-	MIT	-	12	-	11	-	A	-	12	-	PP

Material
- **Blank** - Aluminum
- **B** - Brass
- **S** - Stainless Steel

Series
- **AR** - ArtiStar™

Source
- **LED** - **'e'** Technology with Integral Driver

Housing
- **TR** - Integral Transformer

LED Type
- **e36** - 8WLED/2.7K
- **e23** - 8WLED/4K
- **e22** - 8WLED/3K
- **e27** - 8WLED/Amber

Optics*
- **NSP** - Narrow Spot (Red Indicator)
- **SP** - Spot (Green Indicator)
- **MFL** - Medium Flood (Yellow Indicator)
- **WFL** - Wide Flood (Blue Indicator)

Adjust-e-Lume® Output Intensity** *(Choose factory setting)*
- **A9** (Standard), **A8, A7, A6, A5, A4, A3, A2, A1**

***Please see Adjust-e-Lume® photometry to determine desired intensity.*

Finish

Aluminum Finish

Powder Coat Color	Satin	Wrinkle
Bronze	BZP	BZW
Black	BLP	BLW
White (Gloss)	WHP	WHW
Aluminum	SAP	—
Verde	—	VER

Brass Finish

Machined	MAC
Polished	POL
Mitique™	MIT

Stainless Finish

Machined	MAC
Polished	POL
Brushed	BRU *Interior use only.*

Premium Finish

ABP	Antique Brass Powder	CMG	Cascade Mountain Granite	RMG	Rocky Mountain Granite
AMG	Aleutian Mountain Granite	CRI	Cracked Ice	SDS	Sonoran Desert Sandstone
AQW	Antique White	CRM	Cream	SMG	Sierra Mountain Granite
BCM	Black Chrome	HUG	Hunter Green	TXF	Textured Forest
BGE	Beige	MDS	Mojave Desert Sandstone	WCP	Weathered Copper
BPP	Brown Patina Powder	NBP	Natural Brass Powder	WIR	Weathered Iron
CAP	Clear Anodized Powder	OCP	Old Copper	*Also available in RAL Finishes See submittal SUB-1439-00*	

Lens Type
- **12** - Soft Focus Lens
- **13** - Rectilinear Lens

Shielding
- **11** - Honeycomb Baffle

Cap Style
- **A** - 45°
- **B** - 90°
- **C** - Flush
- **D** - 45° less Weep Hole *(Interior Use Only)*
- **E** - 90° less Weep Hole *(Interior Use Only)*

Base Height
- **6** - 6" with Anchor Base
- **12** - 12" with Anchor Base
- **18** - 18" with Anchor Base
- **24** - 24" with Anchor Base

Option
- **PP** - Power Pipe™ option with 18" Stake
- **SF** - Stability Flange *(for use with Power Pipe™)*
- **WM** - Wall or ceiling Mount with 5" dia. canopy**

*** Base height limited to 6" max. with brass and stainless steel fixtures*

DRIVER DATA

Input Volts	InRush Current	Operation Ambient Temperature
12VAC/DC 50/60Hz	<1A (non-dimmed)	-10°F-130°F

LM79 DATA

BK No.	CCT (Typ.)	Input Watts (Typ.)	CRI (Typ.)
e36	2700K	8.4	90
e22	3100K	8.4	90
e23	4100K	8.4	75
e27	Amber (590nm)	7.9	~

L70 DATA

Minimum Rated Life (hrs.) 70% of initial lumens (L_{70})
50,000
50,000
50,000
50,000

*OPTICAL DATA

Beam Type	Angle	Visual Indicator
Narrow Spot	14°	Red Dot
Spot	18°	Green Dot
Medium Flood	25°	Yellow Dot
Wide Flood	36°	Blue Dot

B-K LIGHTING
40429 Brickyard Drive • Madera, CA 93636 • USA
559.438.5800 • FAX 559.438.5900
www.bklighting.com • info@bklighting.com

SUBMITTAL DATE 1-8-14
DRAWING NUMBER SUB001108

THIS DOCUMENT CONTAINS PROPRIETARY INFORMATION OF B-K LIGHTING, INC. AND ITS RECEIPT OR POSSESSION DOES NOT CONVEY ANY RIGHTS TO REPRODUCE, DISCLOSE ITS CONTENTS, OR TO MANUFACTURE, USE OR SELL ANYTHING IT MAY DESCRIBE. REPRODUCTION, DISCLOSURE OR USE WITHOUT SPECIFIC WRITTEN AUTHORIZATION OF B-K LIGHTING, INC. IS STRICTLY FORBIDDEN.

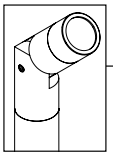

ArtiStar™
BKSSL SOLID STATE LIGHTING
Integral Transformer

the power of e with adjust-e-lume® TECHNOLOGY

INTEGRAL ARTISTAR™

PROJECT:	
TYPE:	

ANCHOR BASE STANDARD MOUNT

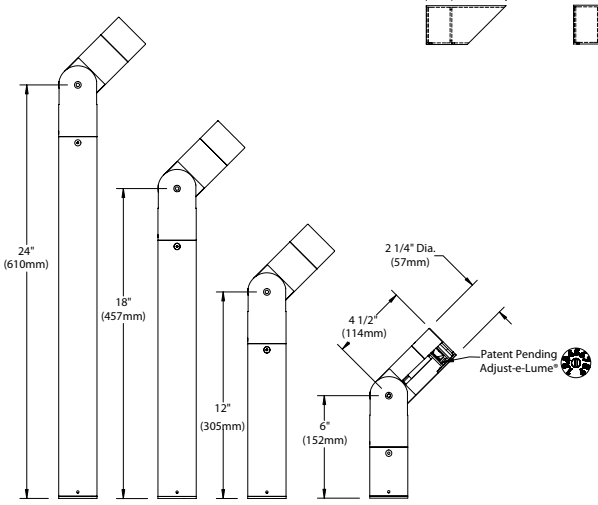

"A/D" CAP

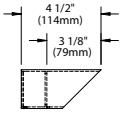

"B/E" CAP

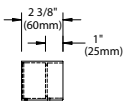

"C" CAP

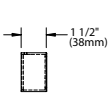

STANDARD BASE

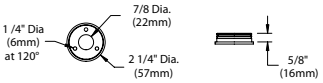

WALL MOUNT CANOPY

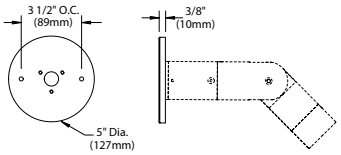

POWER PIPE

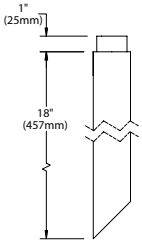

UNIVERSAL RING

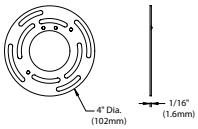

All dimensions indicated on this submittal are nominal.
Contact Technical Sales if you require more stringent specifications.

SPECIFICATIONS

GreenSource Initiative™
Metal and packaging components are made from recycled materials. Manufactured using renewable solar energy, produced onsite. Returnable to manufacturer at end of life to ensure cradle-to-cradle handling. Packaging contains no chlorofluorocarbons (CFC's). Use of this product may qualify for GreenSource efficacy and recycling rebate(s). Consult www.bklighting.com/greensource for program requirements.

Materials
Furnished in Copper-Free Aluminum (Type 6061-T6), Brass (Type 360) or Stainless Steel (Type 304).

Body
Fully machined from solid billet. Unibody design provides enclosed, water-proof wireway and integral heat sink for maximum component life. Integral knuckle for maximum mechanical strength. High temperature, silicone 'O' Ring provides water-tight seal.

Knuckle
'Aim and Lock' knuckle is comprised of two components. The first is integral to the body and features an interior, machined taper. The second is machined from solid billet and features a second, reverse angle taper. The resultant mechanical taper-lock allows a full 180° vertical adjustment without the use of serrated teeth, which inherently limit aiming. High temperature, silicone 'O' Ring provides water-tight seal and compressive resistance to maintain fixture position. Design withstands 73 lb. static load prior to movement to ensure decades of optical alignment. Biaxial source control with 360° horizontal rotation in addition to vertical adjustment.

Cap
Fully machined. Accommodates [1] lens or louver media. Choose from 45° cutoff ('A' or 'D'), 1" deep bezel with 90° cutoff ('B' or 'E'), or flush lens ('C') cap styles. 'A' and 'B' caps include weep-hole for water and debris drainage. 'D' and 'E' caps exclude weep-hole and are for interior use only.

Lens
Shock resistant, tempered, glass lens is factory adhered to fixture cap and provides hermetically sealed optical compartment. Specify soft focus (#12) or rectilinear (#13) lens.

BKSSL®
Integrated solid state system with 'e' technology is scalable for field upgrade. Modular design with electrical quick disconnects permit field maintenance. High power, forward throw source complies with ANSI C78.377 binning requirements. Exceeds ENERGY STAR® lumen maintenance requirements. LM-80 certified components.

Integral, constant current driver. 12VAC/VDC input. 50/60Hz. Proprietary input control scheme achieves power factor correction and eliminates inrush current. Output, over-voltage, open-circuit, and short circuit protected. Inrush current limited to <1A. Conforms to Safety Std. C22.2 No. 250.13-12.

Optics
Interchangeable OPTIKIT™ modules permit field changes to optical distribution. Color-coded for easy reference: Narrow Spot (NSP) = Red. Spot (SP) = Green. Medium Flood (MFL) = Yellow. Wide Flood (WFL) = Blue.

Adjust-e-Lume® (Pat. Pending)
Integral electronics allows dynamic lumen response at the individual fixture. Indexed (100% to 25% nom.) lumen output. Maintains output at desired level or may be changed as conditions require. Specify factory preset output intensity.

Installation
Available for installation in three distinct mounting conditions:

Anchor Base (Standard)
Machined anchor base with 7/8"dia. slip conduit hole and [3] 3/16" dia. anchor bolt holes (hardware by others).

Power Pipe™ (Optional)
Provides a clean transition from wiring system to fixture. Schedule 80, 18" PVC housing for direct burial into soil or concrete. Machined 2-1/4" dia. cap for fixture mounting. Stainless steel hardware. Optional 6" diameter, molded stability flange, which simplifies installation and projects into substrate to reinforce housing stability.

Wall Mount Canopy (Optional)
Optional 5" dia. machined canopy permits mounting to junction box (gasket by others). 6" maximum base height for canopy-mounted brass or stainless steel fixture.

Transformer
Integral, BKSSL electronic transformer. 105-300VAC primary voltage. 50/60Hz. Non Dimming. 20VA maximum load.

Wiring
Teflon® coated, 18AWG, 600V, 250° C rated and certified to UL 1659 standard.

Hardware
Tamper-resistant, stainless steel hardware. Knuckle vertical aiming screw is additionally black oxide treated for additional corrosion resistance.

Finish
StarGuard®, our exclusive RoHs compliant, 15 stage chromate-free process cleans and conversion coats aluminum components prior to application of Class 'A' TGIC polyester powder coating. Brass components are available in powder coat or handcrafted metal finish. Stainless steel components are available in handcrafted metal finish. (Brushed finish for interior use only).

Warranty
5 year limited warranty.

Certification and Listing
ITL tested to IESNA LM-79. Lighting Facts Registration per USDOE (www.lightingfacts.com). ETL Listed to ANSI/UL Standard 1598 and UL Standard 8750. Certified to CAN/CSA Standard C22.2 No. 250. RoHs compliant. Suitable for indoor or outdoor use. Suitable for use in wet locations. Suitable for installation within 4' of the ground. IP66 Rated. Made in USA.

®Teflon is a registered trademark of DuPont Corporation.
®Energy Star is a registered trademark of the United States Environmental Protection Agency.

B-K LIGHTING	40429 Brickyard Drive • Madera, CA 93636 • USA 559.438.5800 • FAX 559.438.5900 www.bklighting.com • info@bklighting.com	SUBMITTAL DATE 1-8-14	DRAWING NUMBER SUB001108

luminii
Lighting for the future, today.

LineLED Wet | Linear LED strip for wet locations - 24V

Applications: Indoor / outdoor use for under / above cabinet, cove lighting, counter accent, architectural accents, under banisters, display and book cases, decks, gazebos, barbeque stations and wet bars.

LineLED Wet is a new small profile, more energy efficient LED strip for wet locations. Available in the standard CRI of 70 as well as high CRI of 80-85, the LineLED Wet has superior light output, a durable but flexible circuit board and it is very easy to install.

Due to the sealing bond needed to guarantee the wet-rating, exact lengths are required to order the LineLED Wet. Extending and turning corners in the field require custom production.

Avoid direct sunlight and UV ray exposure. UV protection required. If the LineLED Wet is enclosed in the Luminii provided extrusions (page 3) no extra UV protection is required other than the provided lens.

LineLED Wet is not suitable for applications where LEDs can become submerged.

Operating voltage
24 VDC

Operating temperature
-40˚F to 140˚F (-40˚C to 60˚C)

Beam Angle
120˚

Average life
30,000 hours

Dimming
Low voltage dimmer and class 2 dimming power supply required

Mounting
3M self-adhesive tape. Mounting to an aluminum profile or the HST aluminum heat sink tape is required to reach the rated 30,000 hours average life.

Approvals
IP65, ETL Class II wet listed

Technical specifications

MODELS	LL18WET	LL30WET	LLX18WET
LEDs/ft	18	30	18
Light output of 3100 K with high CRI	115 lum/ft	207 lum/ft	343 lum/ft
Average power consumption (for 15' section)	1.5 W/ft	2.5 W/ft	4.3 W/ft
Ordering increment	4.00"	2.50"	4.00"
Maximum run length	100 ft	48 ft	25 ft
Dimensions	0.39" W 0.13" H	0.45" W 0.09" H	0.39" W 0.09" H

SECTION START/END OPTIONS

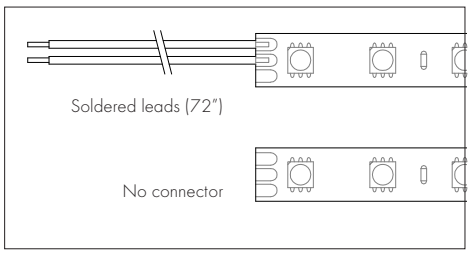

Ordering code

MODEL	CRI		COLOR TEMPERATURE		SECTION START		SECTION END		LENGTH
LL18WET	S	–	27K	–	SL	–	NC	–	
LL18WET LL30WET LLX18WET	S - Standard H - High		27K - 2700K* 31K - 3100K 34K - 3400K 37K - 3700K** 46K - 4600K		SL - Soldered wire leads (72")		SL - Soldered wire leads (72") NC - No connector		view table above for increment options and maximum run limits

*2700 K only available with standard CRI (S)
**3700 K only available with high CRI (H)

luminii
Lighting for the future, today.

LineLED Wet | Linear LED strip for wet locations - 24V

Power consumption per linear foot - loads tested with PSD series of power supplies (page3)

Length of strip (LF)	LL18		LL30		LLX18	
	W/ft	Total wattage	W/ft	Total wattage	W/ft	Total wattage
1	1.65	1.65	2.70	2.70	5.00	5.00
2	1.65	3.30	2.70	5.40	4.95	9.90
3	1.65	4.95	2.70	8.10	4.90	14.70
4	1.63	6.58	2.65	10.60	4.85	19.40
5	1.63	8.21	2.65	13.25	4.80	24.00
6	1.62	9.83	2.65	15.90	4.75	28.50
7	1.62	11.45	2.60	18.20	4.70	32.90
8	1.62	13.07	2.60	20.80	4.65	37.20
9	1.60	14.67	2.60	23.40	4.60	41.40
10	1.60	16.50	2.55	25.50	4.55	45.50
11	1.57	18.07	2.55	28.05	4.50	49.50
12	1.57	19.64	2.55	30.60	4.45	53.40
13	1.57	21.21	2.50	32.50	4.40	57.20
14	1.55	22.76	2.50	35.00	4.35	60.90
15	1.55	24.31	2.50	37.50	4.30	64.50
16	1.55	25.86	2.45	39.20	4.25	68.00
17	1.52	27.38	2.45	41.65	4.20	71.40
18	1.52	28.90	2.45	44.10	4.15	74.70
19	1.52	30.42	2.40	45.60	4.10	77.90
20	1.50	31.20	2.40	48.00	4.05	81.00
21	1.50	32.70	2.40	50.40	4.00	84.00
22	1.50	34.20	2.35	51.70	3.95	86.90
23	1.48	35.68	2.35	54.05	3.90	89.70
24	1.47	37.15	2.35	56.40	3.85	92.40
25	1.47	38.62	2.30	57.50	3.80	95.00
26	1.45	40.07	2.30	59.80		
27	1.45	41.52	2.30	62.10		
28	1.43	42.20	2.25	63.00		
29	1.42	43.00	2.25	65.25		
30	1.40	43.70	2.25	67.50		
31	1.40	45.10	2.20	68.20		
32	1.38	46.50	2.20	70.40		
33	1.37	47.70	2.20	72.60		
34	1.37	49.00	2.15	73.10		
35	1.36	50.45	2.15	75.25		
36	1.36	51.70	2.15	77.40		
37	1.36	52.50	2.10	77.70		
38	1.36	53.00	2.10	79.80		
39	1.35	53.90	2.10	81.90		
40	1.35	54.40	2.05	82.00		
41	1.35	55.75	2.05	84.05		
42	1.34	57.09	2.05	86.10		
43	1.34	58.43	2.02	86.90		
44	1.33	59.76	2.00	88.00		
45	1.33	61.07	2.00	90.00		
46	1.32	61.97	1.96	90.20		
47	1.32	62.70	1.95	91.65		
48	1.31	63.50	1.95	93.60		
49	1.31	64.05				
50	1.30	64.80				
51-60	1.30 - 1.25	65.20 - 70.80				
61-70	1.25 - 1.20	71.00 - 76.20				
71-80	1.20 - 1.10	77.00 - 81.60				
81-90	1.10 - 1.00	82.00 - 86.20				
91-100	1.00 - 0.95	87.00 - 91.40				

luminii
Lighting for the future, today.

LineLED Wet | Linear LED strip for wet locations - 24V

Optional mounting channels - Single row LEDs

Alu-45

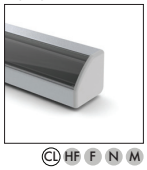

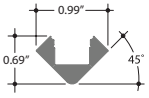

CL HF F N M

Alu-Corner

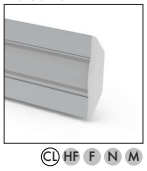

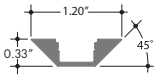

CL HF F N M

Alu-Round

CL F

Slim Line 7

CL HF F N M

Recessed Slim Line 7

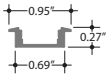

CL HF F N M

Slim Line 15

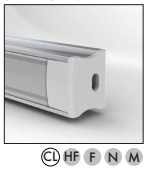

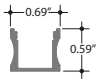

CL HF F N M

Recessed Slim Line 15

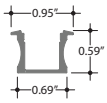

CL HF F N M

Alu-Flat

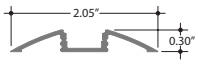

CL HF F N M

Alu-Wall

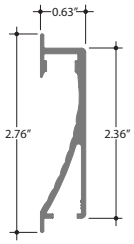

CL F

Slim Wide 8

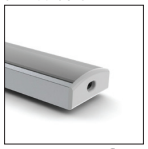

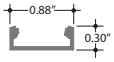

CL F

Recessed Slim Wide

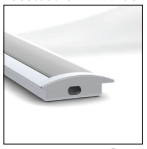

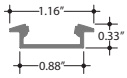

CL F

Slim Wide 15

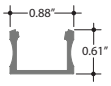

CL F

Alu-Stair

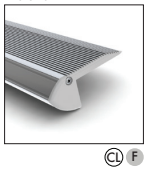

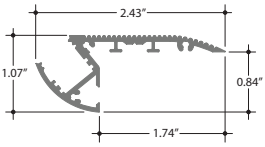

CL F

Alu-ETC

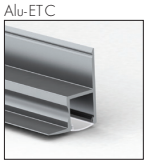

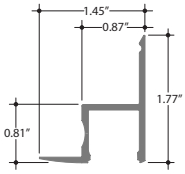

CL F

Lens options

- CL Clear
- F Frosted
- HF Half (50%) frosted
- N Narrow beam frosted
- M Medium beam frosted

Optional mounting channels - Double row LEDs

Power Line 30

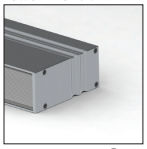

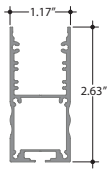

CL F

Recessed Power Line 30

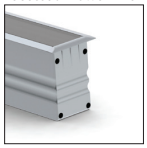

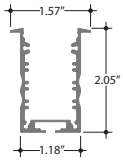

CL F

Recessed Power Line 35

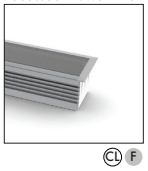

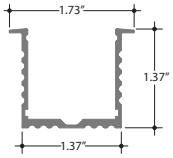

CL F

Power Line 35

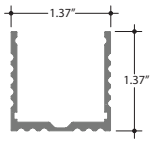

CL F

Installation

All mounting channels are field cuttable using miter saw with circular blade suitable for cutting aluminum.

Lenses and endcaps to be siliconed for wet location applications.

Ordering

Extrusions are sold separately. View respective specsheets for details on ordering extrusions and their accessories (endcaps, mounting brackets, etc).

luminii
Lighting for the future, today.

SlimLine 7 | Extruded aluminum profile

The SlimLine 7 linear aluminum extrusion has been designed to fit many LED lighting needs. Multiple mounting and lens options allow for great flexibility and adaptability for any application. Extrusion and diffuser lenses are also field cuttable. Substantial aluminum mass in profile provides excellent heat sink for high power LEDs. Mounting brackets and endcaps are available in multiple finishes and can be ordered separately (page 2). Linear connector available for extending extrusion runs.

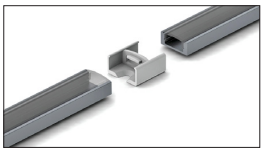

two SlimLine 7 runs and linear connector

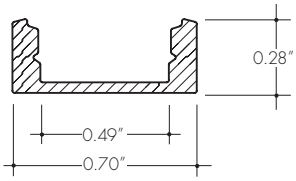

Technical information

Finish: Silver anodized

Diffuser lens: polycarbonate, snap-in-place, UV resistant

Mounting: multiple mounting brackets (page 2)

	78	**118**
Actual length	78.75″	118.19″
Mounting brackets	minimum 3	minimum 4
Available lenses	clear half frosted frosted medium narrow	clear half frosted frosted narrow gel color

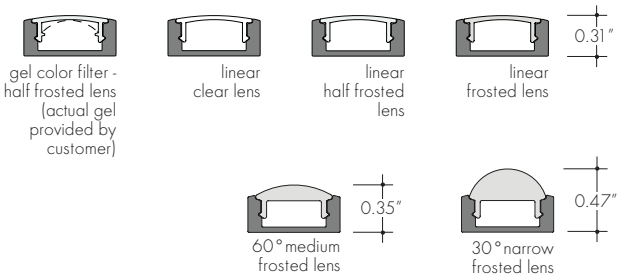

Ordering code

MODEL		LENGTH		DIFFUSER		FINISH
SL7	–	78	–	C	–	SA
SL7 - SlimLine 7		78 - 78.75″ 118 - 118.19″		C - Clear F - Frosted HF - 50% frosted M - Medium N - Narrow G - Gel color filter (view table above for length compatibility)		SA - Silver anodized

luminii
Lighting for the future, today.

SlimLine 7 | Extruded aluminum profile

All accessories sold separately.

Mounting brackets

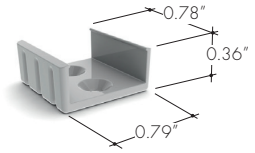

MC-SL7
gray finish, snaps on/off

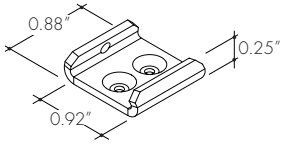

MC-SL7-A
metal finish, secured with set screw

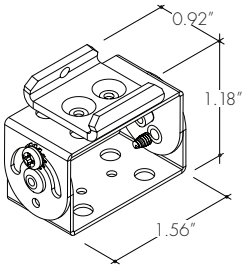

MC-SL7-ADJ
metal finish, adjustable,
secured with set screw

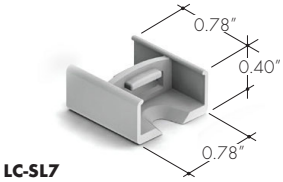

LC-SL7
linear connector - gray finish

LIGHTING SUPPLIER TO FURNISH WITH LENGTHS, MOUNTING ACCESSORIES, FEEDS, AND END CAPS AS REQUIRED FOR APPLICATION.

End-caps

EC-SL7-H1

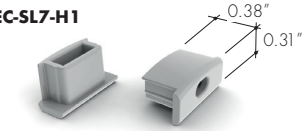

EC-SL7-H2 with powerfeed opening

gray finish, flat lens only

EC-SL7-M-H2 with powerfeed opening

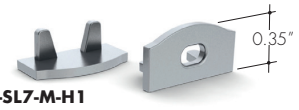

EC-SL7-M-H1

metal finish, 60° medium lens only

EC-SL7-N-H2 with powerfeed opening

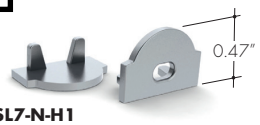

EC-SL7-N-H1

metal finish, 30° narrow lens only

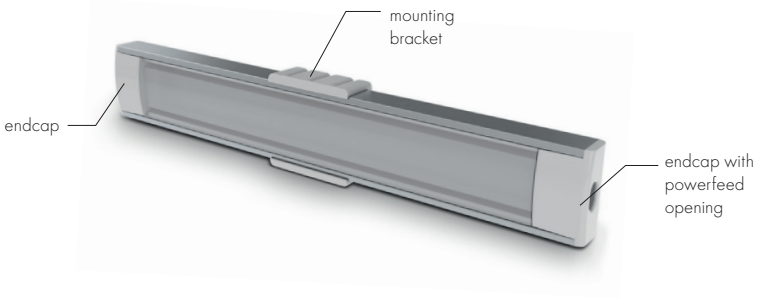

luminii
Lighting for the future, today.

Dimming LED power supply - 24V | PSD series Class II

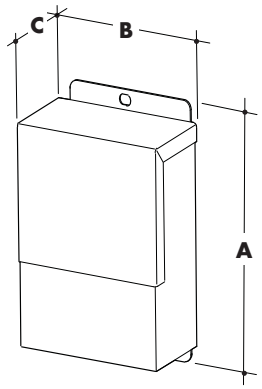

View table below for dimensions of available models.

The PSD series of LED power supplies are specifically designed to work with linear LED strip lights or modules. They feature aluminum heat dissipating housing, seamless forward phase dimming capability, and indoor/outdoor enclosure.

Dimming is possible with low-voltage magnetic dimmer. (see Luminii website for list of compatible dimmers)

Available with 120, 240, or 277 VAC input.

UL listed/recognized in US and Canada (CSA).

Made in USA

LIGHTING SUPPLIER TO CONFIRM QUANTITY AND SIZE REQUIRED.

Technical information

Models	PSD-48-24	PSD-96-24	PSD-288-24*
A Height	11.25"	11.25"	14.25"
B Width	3.37"	3.37"	8.43"
C Depth	3.25"	3.25"	2.20"
Output amps	2 A	4 A	4 A per circuit
Maximum wattage	48 watt	96 watt	96 watt x3 circuits
Rating	Nema 3R UL listed	Nema 3R UL listed	Nema 3R UL recognized

*Do not interconnect output circuits.

Input voltage
120/240/277 VAC

Output voltage
24 VDC (regulated +/- 2% regardless of input or load)

Operating environment
from -22°F to 140°F

Function surface temperature
from -40°F to 176°F

Safety
UL 1310, Manual reset overload protection

Efficiency
80%

Mounting
Wall mounted vertically with conduit access wiring compartment pointing down

Ordering code

Model		Power		Output		Input
PSD	–	48	–	24	–	
PSD - PSD series		**48** - 48 W **96** - 96 W **288** - 288 W (3x 96W)		**24** - 24 VDC		**Blank** - 120 V **240** - 240 V **277** - 277 V

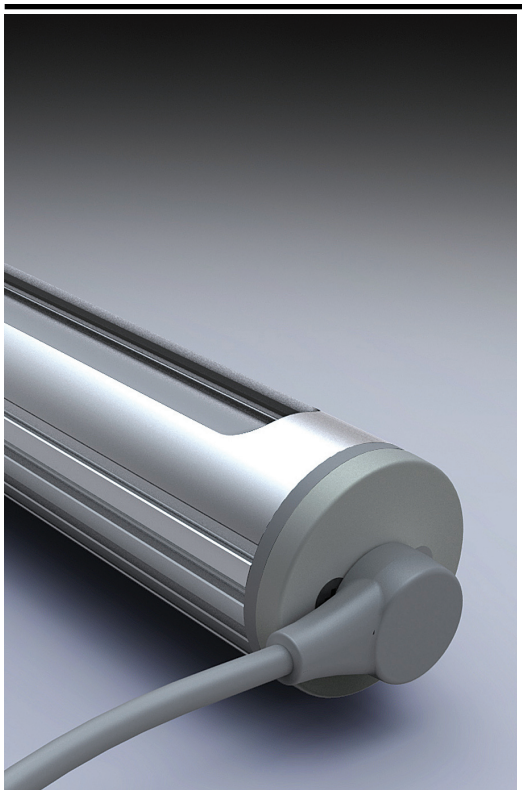

5-year warranty

IP 67 LM 79 LM 80 CE c UL us

line™ 1.5

INTERIOR/EXTERIOR APPLICATIONS

Application

io Lighting's **line series 1.5** is approximately 1.5" in diameter. UL listed for wet locations, this IP67 rated LED-based linear floodlight produces luminous intensities for building facade and bridge accent illumination. Ideal for grazing, electrical feed "plug" connectors eliminate hardwire connections between fixtures, enabling ultimate flexibility for installation and replacement. Individual units may be placed end-to-end to create continuous rows without obvious shadows between fixtures. LEDs are similar to halogen light sources in that they are point sources that can reveal superior definition to textural surfaces and sparkle to reflective surfaces.

series 1.5 is a low voltage linear luminaire available in 12" and 18" lengths and may be daisy chained for continuous row mounted applications. Optional beam spreads along the perpendicular axis of the fixture include 10˚, 45˚ and 65˚. Projected average rated life is 50,000 hours at 70% of lamp lumen output. Ambient temperature surrounding the fixture shall not exceed 122˚F *(50˚C).*

Light Output

line series 1.5 is available with four lumen outputs for white light only. Red, green, blue and amber are available in high output only. All values below are initial lumens per foot. IES LM-79 format files may be obtained from the factory or downloaded from **www.iolighting.com**. All products have a CRI greater than 80. Results are typical measurements.

>> New 3-step MacAdam Binning.

	Standard Output	Mid Output	High Output	Very High Output
2700K White:	67 lms/ft	181 lms/ft	248 lms/ft	343 lms/ft
3000K White:	71 lms/ft	193 lms/ft	264 lms/ft	368 lms/ft
3500K White:	76 lms/ft	205 lms/ft	281 lms/ft	406 lms/ft
4000K White:	76 lms/ft	205 lms/ft	281 lms/ft	394 lms/ft
5000K White:	84 lms/ft	229 lms/ft	314 lms/ft	419 lms/ft

Construction

The light weight, yet durable extruded aluminum housing provides recommended heat sink requirements for LEDs. Patented precision optic assembly is composed of a customized acrylic material that offers very high transmissivity, UV stability and excellent longevity.

Electrical

8'-0" 18 AWG, 300 volt rated power cords are supplied with plug connector. Injection molded end cap is designed to receive both the plug electrical connector and an interconnect for daisy chaining. For detailed information regarding daisy chain limitations, remote distance limitations, power supply options, and dimming options consult the **io** website (**www.iolighting.com**) or an **io** representative.

Driver Remote Distance

18'-0" (5.5m) w/18 AWG
46'-0" (14.0m) w/14 AWG
71'-0" (21.6m) w/12 AWG

Power Consumption

Power consumption does not include power supply losses.

>> New power reduction while delivering the same light output.

Standard Output: 1.52 w/ft
Mid Output: 3.81 w/ft
High Output: 5.59 w/ft
Very High Output: 7.62 w/ft

Finish

Anodized aluminum finish is standard. Custom finishes may be available upon request.

Dimensions

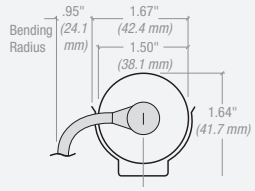

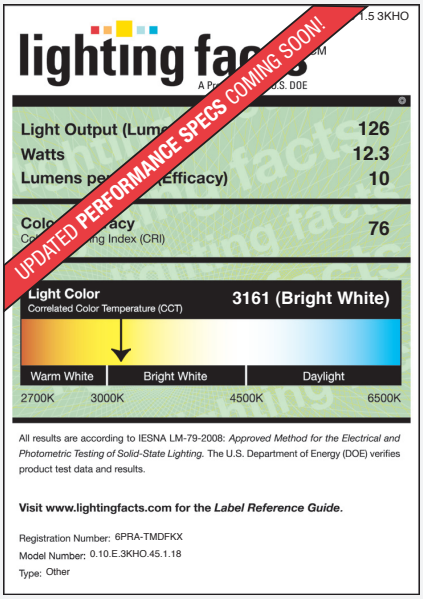

Label references 18" **line 1.5** fixture with a 45˚ beam spread in High Output 3000K. Lighting Facts for additional beam spreads and light output levels may be obtained from **io** Lighting.

io Lighting 1100 Busch Pkwy Buffalo Grove, IL 60089 T 847.777.3900 F 847.777.3901 E info@iolighting.com W iolighting.com

line™ 1.5

Light Output / Distributions / Electrical Feed Options

18" 3KHO 10 DEGREE

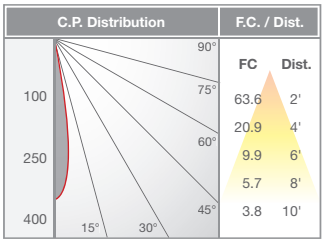

18" 3KHO 45 DEGREE

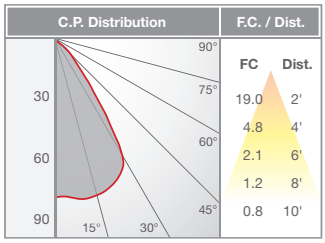

18" 3KHO 65 DEGREE

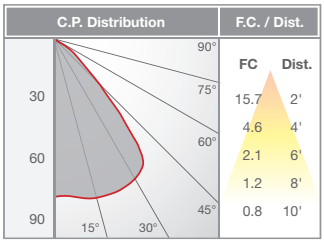

LIGHT OUTPUT CONVERSION TABLE

	Standard Output	Mid Output	High Output	Very High Output
2700K White	0.25[1]	0.69[1]	0.94[1]	1.30[1]
3000K White	0.27[1]	0.73[1]	1.00[1]	1.39[1]
3500K White	0.29[1]	0.78[1]	1.06[1]	1.54[1]
4000K White	0.29[1]	0.78[1]	1.06[1]	1.49[1]
5000K White	0.32[1]	0.87[1]	1.19[1]	1.59[1]

Color Light Output	RED	GREEN	BLUE	AMBER
Light Output Multiplier	0.53[2]	0.51[2]	0.30[2]	0.51[2]

*Note: Visit **www.iolighting.com** or contact an **io** representative for IES format photometrics.*

LIGHTING SUPPLIER TO FURNISH LENGTHS, FEED, AND CONNECTING CABLES AS REQUIRED BY LAYOUT.

Electrical Feed "Plug" Connectors

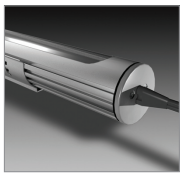

2. End feed

3. Right side feed

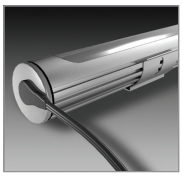

4. Left side feed

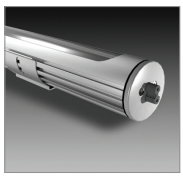

Rigid Interconnector
(for continuous row mounting)

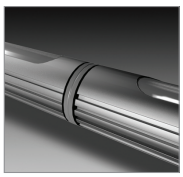

Rigid Interconnect plug
(for daisy chaining – requires a LEVEL mounting surface)

6" Interconnect

Note: All plug connectors are field interchangeable.

Mounting Options

Surface Mount

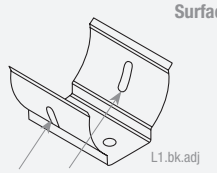

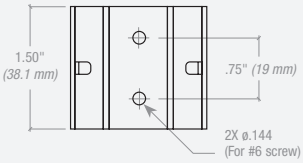

Vertical Mount

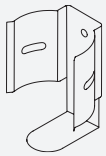

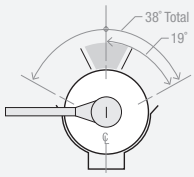

Note: line 1.5 may be rotated within the bracket for field adjustable aiming.

line series 1.5 is not rated for submersible applications. **line 1.5** should not be mounted in conditions where there is any standing water whatsoever.

Note: Architectural detail MUST allow for access to set screws to ensure stable mounting condition.

Order Code

io	1	2	3	4	5	6	7	8	9	10	11
0	10	E									

1. LIGHT OUTPUT
10 — 1.5 SO, MO or HO

2. LOCATION
E — Exterior

3. COLOR
27K — White 2700K SO[1]
27KMO — White 2700K MO[1]
27KHO — White 2700K HO[1]
27KVHO — White 2700K VHO[1]
3K — White 3000K SO[1]
3KMO — White 3000K MO[1]
3KHO — White 3000K HO[1]
3KVHO — White 3000K VHO[1]
35K — White 3500K SO[1]
35KMO — White 3500K MO[1]
35KHO — White 3500K HO[1]
35KVHO — White 3500K VHO[1]
4K — White 4000K SO[1]
4KMO — White 4000K MO[1]
4KHO — White 4000K HO[1]
4KVHO — White 4000K VHO[1]
5K — White 5000K SO[1]
5KMO — White 5000K MO[1]
5KHO — White 5000K HO[1]
5KVHO — White 5000K VHO[1]
R — Red[2]
G — Green[2]
B — Blue[2]
A — Amber[2]
CC — Custom Color[3]

4. DISTRIBUTION
10 — 10 Degree
45 — 45 Degree
65 — 65 Degree

5. MOUNTING
100 — Surface mount
103 — Vertical mount*
**Note: For vertical mount applications, one (1) surface mount bracket and one (1) vertical mount bracker per fixture.*

6. FINISH
1 — Anodized aluminum
2 — Anodized custom color

7. LENGTH
ACTUAL (in/mm)
12 — 12" *(12.68"/322.07mm)*
18 — 18" *(18.34"/465.83mm)*
FOR CONTINUOUS ROW
Specify length (e.g., 96'-0")
Note: Overall length must be divisible by 18.34" or 12.68"

8. ELECTRICAL FEED
2 — End feed
3 — Right side feed
4 — Left side feed
5 — 6" interconnects left side and right side feeds
Note: For straight continuous rows fed by one driver, interconnects shall be supplied as required.

9. VOLTAGE / DIMMING
1 — 120v
2 — 277v
3 — 120v w/dim
4 — 277v w/dim
5 — Other (International voltage)

10. SPECIFY DRIVER / DIMMING
*Note: If not specified otherwise, **io** will supply 100 watt drivers. Download Power Supply specification sheet from **www.iolighting.com**.*

11.
CE — Available upon request.

*Scan this QR code to view **line 1.5** applications or visit **youtube.com/iolighting**.*

Footnotes

1. *White light variance between LEDs is equal to or better than 3-step MacAdam Binning.*
2. *Refer to conversion table for output. Only available in 7.6 w/ft.*
3. *Non-standard color temperature and CRI are available. Consult factory for availability.*

io Lighting 1100 Busch Pkwy Buffalo Grove, IL 60089 T 847.777.3900 F 847.777.3901 E info@iolighting.com W iolighting.com

100-Watt Driver

POWER SUPPLY | 100D-2.0-11x4x4

LIGHTING SUPPLIER TO CONFIRM QUANTITY AND SIZE REQUIRED.

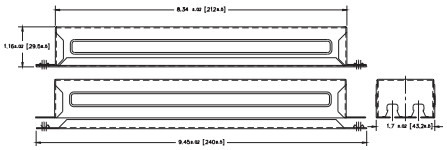

Note: 11" (L) x 4" (W) x 4" (H) enclosure is requied by UL.

Key Features

- UL Class 2
- Ultra small, compact size
- Tightly regulated output: 1% line, 5% load
- Power factor: 90% min
- Total harmonic distortion: 20% max
- Current crest factor: 1.5 max

Specifications

Location: **Damp IP66**
Output Voltage: **24v DC**
Output Power: **100w**
Input Voltage: **120 to 277 VAC**
Ambient Temp: **-40˚C to +50˚C**
Weight: **1.41 lbs**
Dimming: **Yes**

Remote Distance		Diameter	
7'-0"	*(2.1m)*	w/22 AWG	*(.644mm)*
18'-0"	*(5.5m)*	w/18 AWG	*(1.02mm)*
46'-0"	*(14.0m)*	w/14 AWG	*(1.63mm)*
71'-0"	*(21.6m)*	w/12 AWG	*(2.05 mm)*

100W	Max Run Length in Series		Max Run Lengths in Parallel	
line .75 - SO	50'	*(15.24m)*	55'	*(16.76m)*
line .75 - MO	23'	*(7.01m)*	25'	*(7.62m)*
line .75 - HO and color	15'	*(4.57m)*	17'	*(5.18m)*
line .75 - VHO	11'	*(3.35m)*	12'	*(3.66m)*
line 1.5 - SO	15'	*(4.57m)*	55'	*(16.76m)*
line 1.5 - MO	7.5'	*(2.29m)*	25'	*(7.62m)*
line 1.5 - HO	6'	*(1.83m)*	17'	*(5.18m)*
line 1.5 - VHO	4'	*(1.22m)*	10'	*(3.05m)*
LEDge - SO	23'	*(7.01m)*	25'	*(7.62m)*
LEDge - HO	15'	*(4.57m)*	17'	*(5.18m)*
luxrail - SO	50'	*(15.24m)*	55'	*(16.76m)*
luxrail - HO and color	15'	*(4.57m)*	17'	*(5.18m)*
line 2.0 - SO	20'	*(6.10m)*	21'	*(6.40m)*
line 2.0 - HO	14'	*(4.27m)*	15'	*(4.57m)*
line 2.0 - VHO	10'	*(3.05m)*	10'	*(3.05m)*
line 2.0 - V2HO	6'	*(1.83m)*	7'	*(2.13m)*

io Lighting 1100 Busch Pkwy Buffalo Grove, IL 60089 T 847.777.3900 F 847.777.3901 E info@iolighting.com W iolighting.com

11x4x4 Enclosure

POWER SUPPLY | 100D-2.0-11x4x4

**One driver enclosure can hold one 20W or 100W driver and one dimming module.*

Enclosure Construction

Enclosure material is a molded fiberglass reinforced polyester (thermoset). The gasket is poured polurethane seamless gasket that provides watertight, dust-tight environmental seal. The cover screws are recessed, captive and stainless steel.

Enclosure Industry Standards

- UL/cUL 50: File E64358 type 1, 3, 4X 6P, 12
- NEMA 250: Type 1, 3, 4X, 6P, 12
- CSA Std 22.2: File LR069014 type 1, 3, 4X, 6P, 12
- Temp rating: (-40° to +120°C)
- Flammability rating: UL94-5V

Front View Without Cover

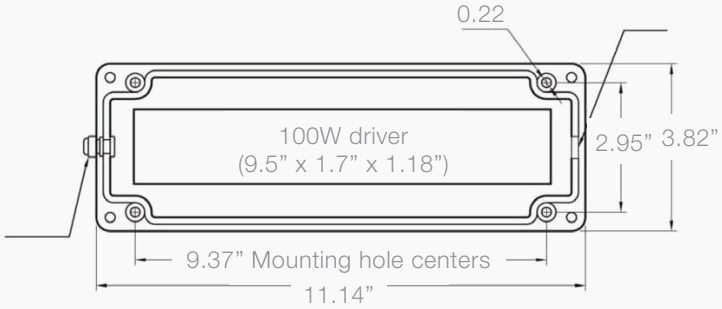

Watertight gland provided by io. Gland can accept 0.114” to 0.25” O.D. wire. Wire is provided by contractor and must be rated for exterior applications.

Left End View With Cover

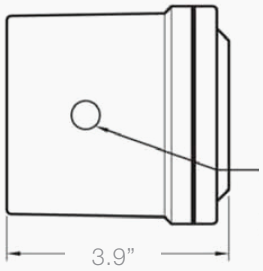

Opening for water-tight gland. Gland is provided by io.

Right End View With Cover

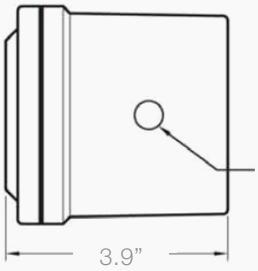

Opening for 1/2” conduit entry. Conduit and conduit fittings provided by others.

Dimming Module

POWER SUPPLY | 100D-2.0-11x4x4

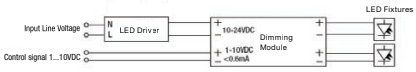

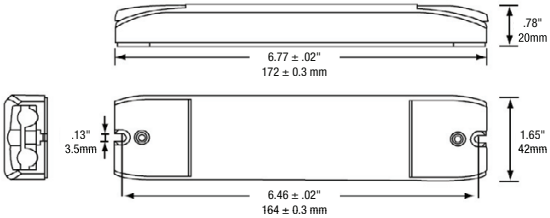

Key Features

- Utilizes pulse width modulation (PWM), to control LED performance
- Options available for analog or DMX protocols
- Dimming range: 0-100%
- Short circuit, overload and overheating protection

Specifications

Location: **Dry**
Input Voltage: **24v DC**
Max Input Current: **5.3A**
Control Voltage: **0-10v DC**
Frequency: **135 HZ**
Ambient Temp: **-20˚C to +50˚C**
Weight: **.165 lbs**
Power Consumption: **Up to 3W**

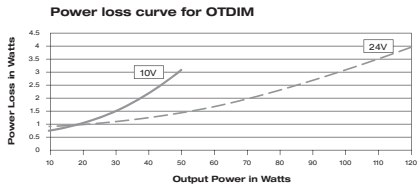

DMX Compatibility

A DMX to 0-10V converter will typically be required to interface with DMX control systems. ETC has tested the dimming module with the Unison Series Dimming Rack. The Unison Flourescent Option Module will provide up to (24) 0-10 signals from a single unit. The dimming module has also been tested with a 0-10 converter from Northlight Systems.

Tested by OSRAM

Manufacturer	Type	Model
HUNT	0-10 wall mount	PS-010
Leviton	0-10 wall mount	IP710-DLW
Lightolie	0-10 wall mount	ZP600F-AM 120W
Lutron	0-10 wall mount	NTFTV Series
	Control Panel	Grafik Eye
	Converter to 0-10v dc	GRX-TVI, GRX-TVM
NorthLight Systems	DMX to 0-10v Converter	8 channels
		24 channels

Source: OSRAM's "Controllers for LED Modules" PowerPoint

Lutron Products

0-10 V (current sink) IEC 60929

Entire Room Controls	
Radio Touch™	included
microWatt™	included
Grafik Eye	
3000/2000	GRX-TVI
4000®	TVM Module
GXI	included
Spacer System	SPSF-6A + GRX - TVI
Building Controls	
LCP128™	TVM Module
G5000™/6000/7000™	TVM Module
Whole Home Controls	
Radio RA®	RA-6ND + GRX-TVI
Homeworks®	GRX-TVI, TVM
Wallbox	
NovaT*®	NTFTV
Nova®	NFTV
Vareo® 2	VF10 + GRX-TVI
Diva® 2	DVF103P + GRX-TVI
Skylark® 2	SF103P + GRX-TVI

Source: Lutron Application Note #138:

***Please contact specific manufacturers for details on specific dimming control*

TEL: (212) 865-1565 FAX: (212) 865-4217

Date: _____ Type: _____

Firm Name: _____

Project: _____

eW Profile Powercore

3000 K, 19.25 in (489 mm)

Ultra-low-profile LED under-cabinet fixture for task and accent lighting

ENERGY STAR

LIGHTING SUPPLIER TO FURNISH FIXTURE LENGTHS AS REQUIRED.

eW Profile Powercore is a direct line voltage, under-cabinet LED fixture for common task lighting and display case applications. Available in 3000 K or 4000 K color temperatures, eW Profile Powercore is suitable for new installations and retrofits requiring superior illumination quality and dramatic energy savings. With an ultra-low-profile housing, three fixture lengths, versatile jumper options, and housing colors to match any environment, eW Profile Powercore offers an unprecedented level of design flexibility and ease of use.

- Onboard Powercore technology — eW Profile Powercore fixtures process power input directly from line voltage. Clip or track mounting options and standard line-neutral-ground wiring dramatically simplify installation.
- Exceptional illumination performance — Meets IESNA illumination specifications for optimal usability and safety in task lighting applications.
- Certified energy efficiency — Consumes just 5.5 W of energy per fixture and can support a continuous run up to 50 ft (15.2 m) in length. As an ENERGY STAR qualified LED luminaire (120 VAC only), eW Profile Powercore meets or exceeds strict energy efficiency guidelines.

For detailed product information, see the Product Guide at www.philipscolorkinetics.com/ls/essentialwhite/ewprofilep/

Specifications

Due to continuous improvements and innovations, specifications may change without notice.

Item	Specification	9.25 in (235 mm)	19.25 in (489 mm)	39.25 in (997 mm)
Output	Beam Angle	105° x 100°		
	Lumens†	220 (3000 K) 276 (4000 K)	450 (3000 K) 479 (4000 K)	862 (3000 K) 1079 (4000 K)
	Efficacy (lm / W)	36.8 (3000 K) 47.3 (4000 K)	44.1 (3000 K) 46.5 (4000 K)	42.3 (3000 K) 52.6 (4000 K)
	CRI	85 (3000 K) 81 (4000 K)	85 (3000 K) 87 (4000 K)	85 (3000 K) 81 (4000 K)
	Lumen Maintenance‡	48,000 hours L_{70} @ 25° C 37,000 hours L_{70} @ 50° C 50,000 hours L_{50} @ 25° C 50,000 hours L_{50} @ 50° C		
Electrical	Input Voltage	100 / 120 / 220 – 240 VAC, 50 / 60 Hz		
	Power Consumption	5.5 W max. at full output, steady state 6 W peak in-rush	10 W max. at full output, steady state 13 W peak in-rush	20 W max. at full output, steady state 25 W peak in-rush
	Power Factor	.99 @ 120 VAC (19.25 in fixture)		
Control	Dimmer	Compatible with many commercially available reverse-phase ELV-type dimmers§		
Physical	Dimensions *(Height x Length x Depth)*	.88 x 9.25 x 1.7 in (22 x 235 x 43 mm)	.88 x 19.25 x 1.7 in (22 x 489 x 43 mm)	.88 x 39.25 x 1.7 in (22 x 997 x 43 mm)
	Weight	7 oz (198 g)	13 oz (369 g)	1.6 lb (728 g)
	Housing	Extruded aluminium, polycarbonate. White, Black, or Gray powder-coated finish.		
	Lens	Polycarbonate		
	Fixture Connections	Integral male / female connectors		
	Temperature Ranges	-4° – 122° F (-20° – 50° C) Operating -4° – 122° F (-20° – 50° C) Startup -40° – 176° F (-40° – 80° C) Storage		
	Humidity	0 – 95%, non-condensing		
	Fixture Run Length	Up to 50 ft (15.3 m) of fixtures in a single run, ≤ 324 W		
Certification and Safety	Certification	UL / cUL, FCC Class B, CE, C-Tick, ENERGY STAR (120 VAC)		
	Environment	Dry / Damp Location, IP50		

* Color temperatures conform to nominal CCTs as defined in ANSI Chromaticity Standard C78.377A.

† Lumen measurement complies with IES LM-79-08 testing procedures.

‡ L_{70} = 70% lumen maintenance (when light output drops below 70% of initial output). L_{50} = 50% lumen maintenance (when light output drops below 50% of initial output). Ambient luminaire temperatures specified. Lumen maintenance calculations are based on lifetime prediction graphs supplied by LED source manufacturers. Calculations for white-light LED fixtures are based on measurements that comply with IES LM-80-08 testing procedures. Refer to www.philipscolorkinetics.com/support/appnotes/lm-80-08.pdf for more information.

§ See www.colorkinetics.com/support/appnotes/ for specific details.

PHILIPS

Fixtures

See Ordering Information Specification Sheet for additional fiixture lengths and housing colors.

Item	Color Temp.	Housing	Length	Item Number	Philips 12NC
eW Profile Powercore, 100 VAC *including Mounting Clips and End-to-End Connector*	3000 K	White	19.25 in (489 mm)	523-000026-43	910503702215
	4000 K	White	19.25 in (489 mm)	523-000026-46	910503702218
eW Profile Powercore, 120 VAC* *including Mounting Clips and End-to-End Connector*	3000 K	White	19.25 in (489 mm)	523-000027-73	910503704138
	4000 K	White	19.25 in (489 mm)	523-000027-76	910503704141
eW Profile Powercore, 220 – 240 VAC *including Mounting Clips and End-to-End Connector*	3000 K	White	19.25 in (489 mm)	523-000028-61	910503700641
	4000 K	White	19.25 in (489 mm)	523-000028-64	910503700644
eW Profile Powercore, 220 – 240 VAC *including Mounting Clips, Leader Cable, and Terminator*	3000 K	White	19.25 in (489 mm)	523-000028-79	910503700659
	4000 K	White	19.25 in (489 mm)	523-000028-82	910503700662

* ENERGY STAR

Use Item Number when ordering in North America.

Accessories

See Ordering Information Specification Sheet for additional housing colors.

Item	Housing	Size	Item Number	Philips 12NC
Leader Cable and Terminator, 100 / 220 – 240 VAC	White	10 ft (3 m)	108-000034-01	910503700259
Permanent Wiring Compartment and Terminator, 120 VAC†	White	1.125 x 1.75 x 3.5 in (29 x 45 x 89 mm) *(Height x Width x Depth)*	120-000065-00	910503700270
Switched Portable Leader Cable and Terminator, 120 VAC	White	10 ft (3 m)	108-000034-00	910503700258
Switched Permanent Wiring Compartment and Terminators, 120 VAC	White	.875 x 2 x 4.25 in (22 x 51 x 108 mm) *(Height x Width x Depth)*	120-000065-04	910503701022
End-to-End Connector, Quantity 5	White	.875 in (22 mm)	108-000035-10	910503700368
Jumper Cable, 100 / 220–240 VAC	White	6 in (152 mm)	108-000035-05	910503700265
		12 in (305 mm)	108-000035-06	910503700266
		18 in (457 mm)	108-000035-07	910503700267
		5 ft (1.5 m)	108-000035-08	910503700268
Jumper Cable, 120 VAC	White	6 in (152 mm)	108-000035-00	910503700260
		12 in (305 mm)	108-000035-01	910503700261
		18 in (457 mm)	108-000035-02	910503700262
		5 ft (1.5 m)	108-000035-03	910503700263
"Y" Jumper Cable and Terminator, 100 / 220 – 240 VAC	White	16.5 in (419 mm)	108-000035-09	910503700269
"Y" Jumper Cable and Terminator, 120 VAC	White	16.5 in (419 mm)	108-000035-04	910503700264
Mounting Track	White	25 @ 9 in (229 mm)	120-000064-02	910503700273
		25 @ 19 in (483 mm)	120-000064-00	910503700271
		24 @ 39 in (991 mm)	120-000064-01	910503700272

† Requires Jumper Cable for fixture connection

Use Item Number when ordering in North America.

Photometrics

eW Profile Powercore
3000 K, 19.25 in (489 mm)

Polar Candela Distribution

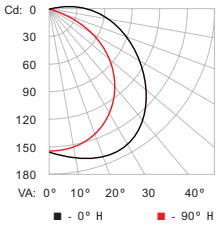

	0.0	45.0	90.0	135.0	180.0
0	155	155	155	155	155
5	161	161	153	150	149
15	169	165	147	133	127
25	171	163	135	111	101
35	166	154	117	85	74
45	152	137	93	59	48
55	132	114	67	36	27
65	106	86	41	18	13
75	80	58	19	7	5
85	51	34	4	1	1
90	37	24	0	0	0

Illuminance at Distance

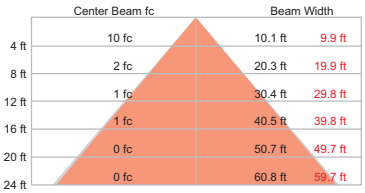

12.4 ft (3.8 m)
1 fc maximum distance

■ Vert. Spread: 103.4°
■ Horiz. Spread: 102.4°

For lux multiply fc by 10.7

Lumens	450
Efficacy	44.1 lm / W

Dimensions

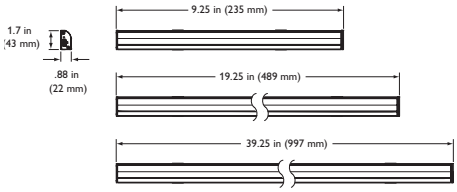

Jumper / Leader Cable

Terminator

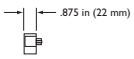

Jumper / Leader Cable

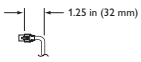

Switched Leader Cable

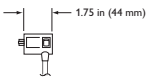

End-to-End Connector

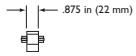

PHILIPS

Philips Color Kinetics
3 Burlington Woods Drive
Burlington, Massachusetts 01803 USA
Tel 888.385.5742
Tel 617.423.9999
Fax 617.423.9998
www.philipscolorkinetics.com

Copyright © 2013 Philips Solid-State Lighting Solutions, Inc. All rights reserved.
Chromacore, Chromasic, CK, the CK logo, Color Kinetics, the Color Kinetics logo, ColorBlast, ColorBlaze, ColorBurst, eW Fuse, ColorGraze, ColorPlay, ColorReach, iW Reach, eW Reach, DIMand, EssentialWhite, eW, iColor, iColor Cove, IntelliWhite, iW, iPlayer, Optibin, and Powercore are either registered trademarks or trademarks of Philips Solid-State Lighting Solutions, Inc. in the United States and / or other countries. All other brand or product names are trademarks or registered trademarks of their respective owners. Due to continuous improvements and innovations, specifications may change without notice.

DAS-000005-09 R06 04-13

Date: _____ Type: _____

Firm Name: _____

Project: _____

eW Profile Powercore

3000 K, 19.25 in (489 mm)

Ultra-low-profile LED under-cabinet fixture for task and accent lighting

ENERGY STAR

LIGHTING SUPPLIER TO FURNISH FIXTURE LENGTHS AS REQUIRED.

eW Profile Powercore is a direct line voltage, under-cabinet LED fixture for common task lighting and display case applications. Available in 3000 K or 4000 K color temperatures, eW Profile Powercore is suitable for new installations and retrofits requiring superior illumination quality and dramatic energy savings. With an ultra-low-profile housing, three fixture lengths, versatile jumper options, and housing colors to match any environment, eW Profile Powercore offers an unprecedented level of design flexibility and ease of use.

- Onboard Powercore technology — eW Profile Powercore fixtures process power input directly from line voltage. Clip or track mounting options and standard line-neutral-ground wiring dramatically simplify installation.
- Exceptional illumination performance — Meets IESNA illumination specifications for optimal usability and safety in task lighting applications.
- Certified energy efficiency — Consumes just 5.5 W of energy per fixture and can support a continuous run up to 50 ft (15.2 m) in length. As an ENERGY STAR qualified LED luminaire (120 VAC only), eW Profile Powercore meets or exceeds strict energy efficiency guidelines.

For detailed product information, see the Product Guide at www.philipscolorkinetics.com/ls/essentialwhite/ewprofilep/

Specifications

Due to continuous improvements and innovations, specifications may change without notice.

Item	Specification	9.25 in (235 mm)	19.25 in (489 mm)	39.25 in (997 mm)
Output	Beam Angle	105° x 100°		
	Lumens†	220 (3000 K) 276 (4000 K)	450 (3000 K) 479 (4000 K)	862 (3000 K) 1079 (4000 K)
	Efficacy (lm / W)	36.8 (3000 K) 47.3 (4000 K)	44.1 (3000 K) 46.5 (4000 K)	42.3 (3000 K) 52.6 (4000 K)
	CRI	85 (3000 K) 81 (4000 K)	85 (3000 K) 87 (4000 K)	85 (3000 K) 81 (4000 K)
	Lumen Maintenance‡	48,000 hours L_{70} @ 25° C 37,000 hours L_{70} @ 50° C 50,000 hours L_{50} @ 25° C 50,000 hours L_{50} @ 50° C		
Electrical	Input Voltage	100 / 120 / 220 – 240 VAC, 50 / 60 Hz		
	Power Consumption	5.5 W max. at full output, steady state 6 W peak in-rush	10 W max. at full output, steady state 13 W peak in-rush	20 W max. at full output, steady state 25 W peak in-rush
	Power Factor	.99 @ 120 VAC (19.25 in fixture)		
Control	Dimmer	Compatible with many commercially available reverse-phase ELV-type dimmers§		
Physical	Dimensions *(Height x Length x Depth)*	.88 x 9.25 x 1.7 in (22 x 235 x 43 mm)	.88 x 19.25 x 1.7 in (22 x 489 x 43 mm)	.88 x 39.25 x 1.7 in (22 x 997 x 43 mm)
	Weight	7 oz (198 g)	13 oz (369 g)	1.6 lb (728 g)
	Housing	Extruded aluminium, polycarbonate. White, Black, or Gray powder-coated finish.		
	Lens	Polycarbonate		
	Fixture Connections	Integral male / female connectors		
	Temperature Ranges	-4° – 122° F (-20° – 50° C) Operating -4° – 122° F (-20° – 50° C) Startup -40° – 176° F (-40° – 80° C) Storage		
	Humidity	0 – 95%, non-condensing		
	Fixture Run Length	Up to 50 ft (15.3 m) of fixtures in a single run, ≤ 324 W		
Certification and Safety	Certification	UL / cUL, FCC Class B, CE, C-Tick, ENERGY STAR (120 VAC)		
	Environment	Dry / Damp Location, IP50		

* Color temperatures conform to nominal CCTs as defined in ANSI Chromaticity Standard C78.377A.

† Lumen measurement complies with IES LM-79-08 testing procedures.

‡ L_{70} = 70% lumen maintenance (when light output drops below 70% of initial output). L_{50} = 50% lumen maintenance (when light output drops below 50% of initial output). Ambient luminaire temperatures specified. Lumen maintenance calculations are based on lifetime prediction graphs supplied by LED source manufacturers. Calculations for white-light LED fixtures are based on measurements that comply with IES LM-80-08 testing procedures. Refer to www.philipscolorkinetics.com/support/appnotes/lm-80-08.pdf for more information.

§ See www.colorkinetics.com/support/appnotes/ for specific details.

PHILIPS

Fixtures

See Ordering Information Specification Sheet for additional fiixture lengths and housing colors.

Item	Color Temp.	Housing	Length	Item Number	Philips 12NC
eW Profile Powercore, 100 VAC *including Mounting Clips and End-to-End Connector*	3000 K	White	19.25 in (489 mm)	523-000026-43	910503702215
	4000 K	White	19.25 in (489 mm)	523-000026-46	910503702218
eW Profile Powercore, 120 VAC* *including Mounting Clips and End-to-End Connector*	3000 K	White	19.25 in (489 mm)	523-000027-73	910503704138
	4000 K	White	19.25 in (489 mm)	523-000027-76	910503704141
eW Profile Powercore, 220 – 240 VAC *including Mounting Clips and End-to-End Connector*	3000 K	White	19.25 in (489 mm)	523-000028-61	910503700641
	4000 K	White	19.25 in (489 mm)	523-000028-64	910503700644
eW Profile Powercore, 220 – 240 VAC *including Mounting Clips, Leader Cable, and Terminator*	3000 K	White	19.25 in (489 mm)	523-000028-79	910503700659
	4000 K	White	19.25 in (489 mm)	523-000028-82	910503700662

* ENERGY STAR

Use Item Number when ordering in North America.

Accessories

See Ordering Information Specification Sheet for additional housing colors.

Item	Housing	Size	Item Number	Philips 12NC
Leader Cable and Terminator, 100 / 220 – 240 VAC	White	10 ft (3 m)	108-000034-01	910503700259
Permanent Wiring Compartment and Terminator, 120 VAC†	White	1.125 x 1.75 x 3.5 in (29 x 45 x 89 mm) *(Height x Width x Depth)*	120-000065-00	910503700270
Switched Portable Leader Cable and Terminator, 120 VAC	White	10 ft (3 m)	108-000034-00	910503700258
Switched Permanent Wiring Compartment and Terminators, 120 VAC	White	.875 x 2 x 4.25 in (22 x 51 x 108 mm) *(Height x Width x Depth)*	120-000065-04	910503701022
End-to-End Connector, Quantity 5	White	.875 in (22 mm)	108-000035-10	910503700368
Jumper Cable, 100 / 220–240 VAC	White	6 in (152 mm)	108-000035-05	910503700265
		12 in (305 mm)	108-000035-06	910503700266
		18 in (457 mm)	108-000035-07	910503700267
		5 ft (1.5 m)	108-000035-08	910503700268
Jumper Cable, 120 VAC	White	6 in (152 mm)	108-000035-00	910503700260
		12 in (305 mm)	108-000035-01	910503700261
		18 in (457 mm)	108-000035-02	910503700262
		5 ft (1.5 m)	108-000035-03	910503700263
"Y" Jumper Cable and Terminator, 100 / 220 – 240 VAC	White	16.5 in (419 mm)	108-000035-09	910503700269
"Y" Jumper Cable and Terminator, 120 VAC	White	16.5 in (419 mm)	108-000035-04	910503700264
Mounting Track	White	25 @ 9 in (229 mm)	120-000064-02	910503700273
		25 @ 19 in (483 mm)	120-000064-00	910503700271
		24 @ 39 in (991 mm)	120-000064-01	910503700272

† Requires Jumper Cable for fixture connection

Use Item Number when ordering in North America.

Photometrics

eW Profile Powercore
3000 K, 19.25 in (489 mm)

Polar Candela Distribution

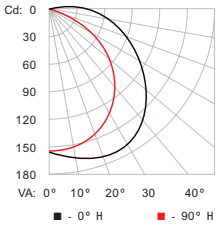

	0.0	45.0	90.0	135.0	180.0
0	155	155	155	155	155
5	161	161	153	150	149
15	169	165	147	133	127
25	171	163	135	111	101
35	166	154	117	85	74
45	152	137	93	59	48
55	132	114	67	36	27
65	106	86	41	18	13
75	80	58	19	7	5
85	51	34	4	1	1
90	37	24	0	0	0

Illuminance at Distance

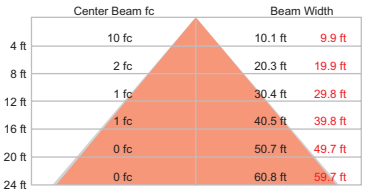

12.4 ft (3.8 m)
1 fc maximum distance

■ Vert. Spread: 103.4°
■ Horiz. Spread: 102.4°

For lux multiply fc by 10.7

Lumens	450
Efficacy	44.1 lm / W

Dimensions

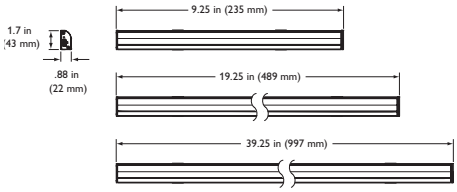

Jumper / Leader Cable

Terminator

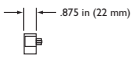

Jumper / Leader Cable

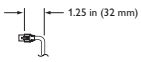

Switched Leader Cable

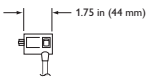

End-to-End Connector

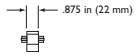

PHILIPS

Philips Color Kinetics
3 Burlington Woods Drive
Burlington, Massachusetts 01803 USA
Tel 888.385.5742
Tel 617.423.9999
Fax 617.423.9998
www.philipscolorkinetics.com

Copyright © 2013 Philips Solid-State Lighting Solutions, Inc. All rights reserved.
Chromacore, Chromasic, CK, the CK logo, Color Kinetics, the Color Kinetics logo, ColorBlast, ColorBlaze, ColorBurst, eW Fuse, ColorGraze, ColorPlay, ColorReach, iW Reach, eW Reach, DIMand, EssentialWhite, eW, iColor, iColor Cove, IntelliWhite, iW, iPlayer, Optibin, and Powercore are either registered trademarks or trademarks of Philips Solid-State Lighting Solutions, Inc. in the United States and / or other countries. All other brand or product names are trademarks or registered trademarks of their respective owners. Due to continuous improvements and innovations, specifications may change without notice.

DAS-000005-09 R06 04-13

rosco

PERMACOLOR DICHROICS

PRODUCT DESCRIPTION

Rosco Permacolor™ glass dichroic filters are durable, high temperature, high transmission glass color filters, affixed in holders in front of the lens of architectural fixtures, change the color of the light emanating from the fixture.

STANDARD COLORS

31002 Bastard Amber
31012 Bright Straw
31013 Goldenrod
31018 Amber Blush
31033 Light Pink
31048 Purple Fusion
31054 Lavender Accent
31055 Lilac
31062 Booster Blue
31065 Mediterranean Blue
31073 Peacock Blue
31080 Primary Blue
31086 Industrial Green
31337 Pale Pink
33650 Woods Glass
34000 UV Blocker
34200 Deep Purple
34600 Med Red Blue
34630 Hot Pink
34640 Vivid Magenta
34758 Medium Pink
34763 Deep Magenta
34853 Turquoise
34959 Lt Yellow Green
34965 Lavender
35055 Primary Green
35100 Lt Blue Green
35156 Fern Green
35200 Yellow
35400 Sky Blue
35401 Amber
35590 Cyan
35600 Med Orange
35700 Sea Blue
35900 Orange
36100 Flame Red
36500 Primary Red
38000 IR/UV Filter
43026 White Diffusion
43202 CTB
43204 1/2 CTB
43208 1/4 CTB
43407 CTO
43408 1/2CTO
43409 1/4CTO

Custom colors and Library colors also available. Contact Rosco for more information.

PRODUCT NUMBER/ORDERING INFORMATION

For standard sizes:
Product number: **R + color number + suffix**

Size	Suffix
2″ x 2″	7508
1.95″ round	7495
5.25″ (133 mm)round	7133
6.3″ (160 mm) round	7160
8.25″ (209 mm) round	7209
13.5″ (343 mm) round	7343

Example: 34600, 2″ x 2″: R346007508

For custom sizes:
Product number: **R + color number + size**

LIGHTING SUPPLIER TO COORDINATE SIZES AS REQUIRED FOR EACH FIXTURE TYPE. COLORS TBD BY LIGHTING DESIGNER BASED ON MOCK-UPS.

DELIVERY LEAD TIME

Lead times are dependent on existing production schedules and order quantity. Contact Rosco for a confirmed delivery date.

rosco
www.rosco.com
52 Harbor View Avenue, Stamford, CT 06902 • (203)708-8900 • 1(800)ROSCO NY • Fax: (203)708-8919
1120 N. Citrus Avenue, Hollywood, CA 90038 • (323)462-2233 • 1(800)ROSCO LA • Fax: (323)462-3338
Also in: Toronto, London, Madrid, São Paulo and Sydney

rosco

PERMACOLOR DICHROICS

MANUFACTURING INFORMATION

Rosco Permacolor™ glass dichroic filters are manufactured to exacting tolerances in a state-of-the-art, 36" vacuum deposition chamber. This optimally sized manufacturing line allows for unprecedented control of color and film density. Permacolor filters are extremely durable and precisely repeatable, meeting the high expectations of entertainment and architectural lighting designers throughout the world.

DESCRIPTION OF FILM COATING

All films are manufactured using oxide compounds of (Ti02 and Si02) that are evaporated by an electron beam source in a high vacuum and high temperature (> 240º C) environment. This produces a dense film that is highly resistant to damage from abrasion, humidity, chemicals and spectral radiation. Under normal conditions the life expectancy of these films is greater than 10 years. However, dielectric films are porous by nature. Long term exposure to high humidity or high temperature environments may cause color shifts of ±5 nm.

PRODUCT SPECIFICATIONS

Dimensions:

Standard sizes:
- 2" x 2"
- 1.95" round
- 5.25" (133 mm) round
- 6.3" (160 mm) round
- 8.25" (209 mm) round
- 20 - 343mm Ø
- 10 - 242 mm square
- Custom sizes

Cutting Tolerance:

±0.5mm

Angle of Incidence:

Mean polarity shift of 1% per 10º up to 45º off axis. Optimal color rendering in luminaires narrower than 50° beam spread.

Fixtures with beam spreads wider than 40º may exhibit perceptible color shifting at the periphery of the beam. The wider the beam spread, the more significant the color shift will be.

Surface Defects:

80 - 50 — MIL. O-13830 Scratch/Dig Test (.08mm Scratch or .05mm Dig per 20 sq. cm viewed by unaided eye w/ 40 watt source)

Humidity:

Passes Mil. C-48497 (95 - 100% @ 50C per 24 hour period)

Thickness:

Standard thickness: 1.75 mm ±0.2mm
Optional thickness: 1.1mm ±0.2mm, 3.3mm ±0.2mm

Temperature:

Maximum short term (< 1 hour): -50º C to 450º C
Maximum continuous (> 24 hours): 200º C
RTD < 90K (hot spotting)

Color Tolerance:

+/- 5nm of designed Half Height

Adhesion:

Passes Mil. C-48497 (Cellophane Tape Test)

Abrasion:

Passes Mil. C-48497 (Moderate, 50 strokes with cheesecloth)

Aperture:

>95% (guaranteed usable area)

rosco
www.rosco.com
52 Harbor View Avenue, Stamford, CT 06902 • (203)708-8900 • 1(800)ROSCO NY • Fax: (203)708-8919
1120 N. Citrus Avenue, Hollywood, CA 90038 • (323)462-2233 • 1(800)ROSCO LA • Fax: (323)462-3338
Also in: Toronto, London, Madrid, São Paulo and Sydney

rosco

PERMACOLOR DICHROICS

APPROPRIATE LUMINAIRES:

Determining whether dichroic filters are appropriate for use with a given fixture requires consideration of three different factors: filter size, beam spread and fixture wattage.

Beam spread: Fixtures with beam spreads wider than 40º may exhibit color shifting at the periphery of the beam. The wider the beam spread, the more significant the color shift will be.

Heat: Dichroic filters are rated for continuous exposure to 200º C and short term exposure to 450º C temperatures. A combination of factors such as lamp type, reflector type, reflector design and position of the filter within the optical system determine the temperature of the filter. Refer to the luminaire manufacturer's specifications for temperature measurements or perform your own tests as needed.

INSTALLATION:

Install dichroic filters with the coated side of the filter towards the lamp. To determine the coated side of the filter, touch the point of a pen or pencil to the glass. If you are touching the coated side, the tip will appear to touch its reflection in the glass. On the un-coated side, the reflection appears with a small gap between the points.

COLOR FRAMES:

Whenever possible, dichroic filters should be mounted in frames designed specifically for glass filters. Contact the fixture manufacturer to determine if the appropriate holder is available. Rosco can supply holders for many typical theatrical fixtures. In certain cases dichroic filters can be mounted within the lens assembly using heat-resistant silicon adhesive. UNDER NO CIRCUMSTANCES SHOULD DICHROIC FILTERS BE USED TO REPLACE THE MANUFACTURER'S INSTALLED SAFETY GLASS.

PRICING:

Dichroic filter prices are determined by the size of the filter required, irrespective of the color specified.

Definition of Failure:

All tests are based on the mechanical properties of the film to resist cracking, flaking, peeling or blistering. They do not include spectral performance or color shifting tolerances caused by extreme temperature and humidity conditions. These are highlighted as side notes with the appropriate subjects.

Disclaimer:

The statements regarding the above subjects are theoretical in nature and are assumed to be accurate. Testing for adhesion and abrasion was performed on a 3" x 3" sample of No.3640 Woods Glass, the thickest coating available in the Permacolor range and therefore most likely to fail during testing. Additionally, a "Torch Test" was conducted in which the coated surface of the filter was slowly heated with a propane torch until the substrate failed (~450º C) with no visible damage done to the coating.

rosco
www.rosco.com
52 Harbor View Avenue, Stamford, CT 06902 • (203)708-8900 • 1(800)ROSCO NY • Fax: (203)708-8919
1120 N. Citrus Avenue, Hollywood, CA 90038 • (323)462-2233 • 1(800)ROSCO LA • Fax: (323)462-3338
Also in: Toronto, London, Madrid, São Paulo and Sydney

rosco

FLUORESCENT SLEEVES/ TUBE GUARDS

PRODUCT DESCRIPTION

Rosco Fluorescent Sleeves can add virtually any color to your fluorescent lighting and protect against the dangers of lamp breakage by containing the shattered glass.

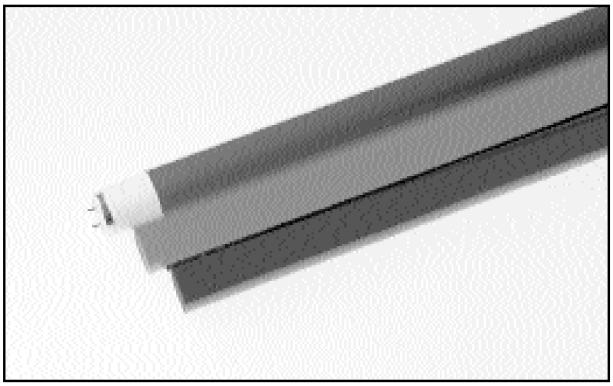

ROSCO SLEEVES

Clear, polycarbonate tubes come with the specified Rosco color filter inserted inside the sleeve. Specify any of the more than 300 colors found in Rosco's Roscolux or Cinegel color filter lines. A combination of up to three filters may be specified.

No minimum quantities required per order

T8 and T5 include a UV filter to prevent premature color fading.

Available in sizes for T12, T8, and T5 lamps.

End Caps are available, which fit snugly over the ends and will hold the lamps in place even if broken, preventing them from falling.

CHROMA SLEEVES

Chroma Sleeves are body-colored, extruded polycarbonate sleeves with an added UV absorber to prevent premature color fading.

Available in standara stocked colors or custom colors matched to any Rosco filter.

Each sleeve comes with two end caps which fit snugly over the ends and will hold the lamps in place even if broken, preventing shattered glass from falling.

Standard colors in Dark Blue, Light Blue, Green, Red, Light Red, Purple, Pink, Yellow and Amber. T12, T8, T5 lamps. 4' standard.

For Custom Colors: minimum order of 2400 Linear feet per color, per diameter. Allow 2-4 weeks for delivery.

LIGHTING SUPPLIER TO COORDINATE SIZES AS REQUIRED FOR EACH FIXTURE TYPE. COLORS TBD BY LIGHTING DESIGNER BASED ON MOCK-UPS.

rosco
www.rosco.com
52 Harbor View Avenue, Stamford, CT 06902 • (203)708-8900 • 1(800)ROSCO NY • Fax: (203)708-8919
1265 Los Angeles Street, Glendale, CA 91204 • (818)543-6700 • 1(800)ROSCO LA • Fax: (818)662-9470
Also in: Toronto, London, Madrid, São Paulo and Sydney

rosco

FLUORESCENT SLEEVES/ TUBE GUARDS

PRODUCT SPECIFICATIONS

Dimensions:

T12 SLEEVES	T8 SLEEVES	T5 SLEEVES
OD: 1.71"	OD: 1.22"	OD: .74"
ID: 1.67"	ID: 1.18"	ID: 0.68"
Len: 46.5"/92.5"	Len: 46.5"/92.5"	Len: 44.75"
Wall: 0.020"	Wall: 0.020"	Wall: 0.040"

PRODUCT NUMBER/ORDERING INFORMATION

Rosco Sleeve: 110 - 08401 - **AA** - **BB** - **COLOR**
ChromaTube: 110 - 08410 - **AA** - **BB** - **COLOR**

AA = Length Use "48" for 4' tube guards. Use "96" for 8' tube guards.
BB = Diameter Use "12" for T12, "08" for T8, "05" for T5/6
COLOR = Specify Rosco color number (eg. "02" for Roscolux 02)

Example: 4' T8 with Roscolux 337 = 110 - 08401 - 48 - 08 - 337

End Caps: 110 - 08499 - 00 - **DD**

DD = Diameter Use "12" for T12, "08" for T8

Example: T12 End Cap = 110 -08499 - 00 - 12

PRODUCT USAGE WARNINGS

Fluorescent Sleeves are not suitable for use with HO (High Output) or VHO (Very High Output) lamps due to excessive heat generated at the electrodes. This includes T5 and T8 lamps. The temperature is in exces to the deflection temperature of the plastic sleeve and can be exacerbated whena dding filter media. The result of exceeding the deflection temperature may cause the color to fade or brown, or in extreme cases, the plastics to melt and fuse to the lamp. Rosco UV filter prevents the fluorescent sleeve from melting to the the lamp, but will not deter color degradation on HO or VHO lamps. Heat Sink Screens may be used may be used with lamps that generate excessive heat. The metal mesh screen is wrapped around the end of the lamp and spreads the hear build-up, preventing the deterioration and melting of the plastic sleeve. Heat Sink Screens will not prevent color degradation. Rosco uses the highest grade UL94 rated polymers when manufacturing sleeves. This caution is not a defect in the plastic, but rather exceeding the operating temperature of any optically clear plastic available for manufacturing sleeves.

rosco
www.rosco.com
52 Harbor View Avenue, Stamford, CT 06902 • (203)708-8900 • 1(800)ROSCO NY • Fax: (203)708-8919
1265 Los Angeles Street, Glendale, CA 91204 • (818)543-6700 • 1(800)ROSCO LA • Fax: (818)662-9470
Also in: Toronto, London, Madrid, São Paulo and Sydney

FOCUS LIGHTING

Manhattan West SW
New York, NY

Channel Schedule

Revised: October 23, 2014
Printed: 10/29/2014 15:38
Bulletin 2
F:\Manhattan West Residential Project\[Manhattan West - Amenities CHANNEL SCHEDULE.xlsx]Channel Schedule

DEPT OF BLDGS121185760 Job Number

ES093598152 Scan Code

MAIN PRESET CONTROL SYSTEM:
LIGHTING CONTROL SYSTEM SHALL BE: ETC PARADIGM SYSTEM WITH RACKS AND MODULES AS REQUIRED. REFER TO LIGHTING RISER DIAGRAM FOR ADDITIONAL INFORMATION.

LOBBY

FIXTURE LOCATION	SHEET NUM.	CHAN NUM.	CIRC. NUM.	CHANNEL DESCRIPTION	FIX. QTY.	FIX. TYPE	FIXTURE DESCRIPTION	LAMP TYPE	LOAD TYPE	FIX. VOLT	DATA REQ'D	FIX. WATTS	DEVICE WATTS	TOTAL CIRC WATTS	CIR. REQ'D	CONTROL TYPE	FOR EM.	NOTES
ENTRY	LD-201	**101**	**101EM**	LOBBY PENDANTS	1	LT-104	DECORATIVE PENDANT	TBD	TBD	120V	N	140 w	140 w	140 w	1	EM-DIM	Y	
ENTRY	LD-201	**102**	**102EM**	LOBBY PENDANTS	4	LT-105	DECORATIVE PENDANT	TBD	TBD	120V	N	18 w	72 w	72 w	1	EM-DIM	Y	
ENTRY	LD-201	**103**	**103A**	LOBBY TRACK ACCENTS	8	LTB	TRACK MOUNTED ADJUSTABLE ACCENT	LED	LED-MLV	12V	N	12 w	96 w	96 w	1	DIM		
ENTRY	LD-201		**103A**	LOBBY TRACK ACCENTS	41 FT	LTA	LOW VOLTAGE TRACK	0	LED-MLV	12V	N	w	w					
ENTRY	LD-201		**103A**	LOBBY TRACK ACCENTS	4	LTA-X	REMOTE TRANSFORMER	0	LED-MLV	120V	N	w	w					
ENTRY	LD-101	**104**	**104A**	LOBBY COLUMN SCONCES	16	LT-100	DECORATIVE SCONCE	TBD	TBD	120V	N	18 w	288 w	288 w	1	DIM		
ENTRY	LD-101	**105**	**105A**	LOBBY LAMPS	2	LT-135	DECORATIVE FLOOR LAMP	TBD	TBD	120V	N	40 w	80 w	160 w	1	DIM		
ENTRY	LD-101		**105A**	LOBBY LAMPS	2	LT-136	DECORATIVE TABLE LAMP	TBD	TBD	120V	N	40 w	80 w					
SIDE WALL	LD-201	**106**	**106A**	SIDE WALL GRAZE	42 FT	LLB	LINEAR LINE VOLTAGE LED LIGHT STRIP	LED	LED-ELV	120V	N	13 w	546 w	546 w	1	ELV-DIM		
SIDE WALL	LD-201	**107**	**107A**	LOBBY TRACK ACCENTS	6	LTB	TRACK MOUNTED ADJUSTABLE ACCENT	LED	LED-MLV	12V	N	12 w	72 w	72 w	1	DIM		
SIDE WALL	LD-201		**107A**	LOBBY TRACK ACCENTS	36 FT	LTA	LOW VOLTAGE TRACK	0	LED-MLV	12V	N	w	w					
SIDE WALL	LD-201		**107A**	LOBBY TRACK ACCENTS	2	LTA-X	REMOTE TRANSFORMER	0	LED-MLV	120V	N	w	w					
	UNUSED CHANNELS 108-110																	
CONCIERGE	LD-201	**111**	**111A**	LOBBY TRACK ACCENTS	8	LTB	TRACK MOUNTED ADJUSTABLE ACCENT	LED	LED-MLV	12V	N	12 w	96 w	96 w	1	DIM		
CONCIERGE	LD-201		**111A**	LOBBY TRACK ACCENTS	23 FT	LTA	LOW VOLTAGE TRACK	0	LED-MLV	12V	N	w	w					
CONCIERGE	LD-201		**111A**	LOBBY TRACK ACCENTS	2	LTA-X	REMOTE TRANSFORMER	0	LED-MLV	120V	N	w	w					
CONCIERGE	LD-101	**112**	**112A**	COUNTER FASCIA LIGHTING	32 FT	LLA	LINEAR LED LIGHT STRIP	LED	LED-MLV	24V	N	3 w	96 w	96 w	1	DIM		
CONCIERGE	LD-101		**112A**	COUNTER FASCIA LIGHTING	1	LLA-X	REMOTE TRANSFORMER	0	LED-MLV	120V	N	w	w					
CONCIERGE	LD-201	**113**	**113A**	LOBBY PENDANTS	2	LT-103	DECORATIVE PENDANT	TBD	TBD	120V	N	35 w	70 w	70 w	1	DIM		
CONCIERGE	LD-201	**114**	**114A**	LOBBY TRACK ACCENTS	8	LTB	TRACK MOUNTED ADJUSTABLE ACCENT	LED	LED-MLV	12V	N	12 w	96 w	96 w	1	DIM		
CONCIERGE	LD-201		**114A**	LOBBY TRACK ACCENTS	23 FT	LTA	LOW VOLTAGE TRACK	0	LED-MLV	12V	N	w	w					
CONCIERGE	LD-201		**114A**	LOBBY TRACK ACCENTS	2	LTA-X	REMOTE TRANSFORMER	0	LED-MLV	120V	N	w	w					
CONCIERGE	LD-101	**115**	**115A**	SPARE	1	SPARE	SPARE CIRCUIT FOR FUTURE USE	TBD	TBD	120V	N	w	w	w	1	DIM		
CONCIERGE	LD-201	**116**	**116A**	GENERAL ACCENTS	16	LAA	RECESSED ADJUSTABLE LOW VOLTAGE ACCENT WITH ACCESSORIES	LED MR16	LED-MLV	120V	N	12 w	192 w	192 w	1	DIM		
BIKE SHOP	LD-201	**117**	**117A**	GENERAL ACCENTS	4	LAA	RECESSED ADJUSTABLE LOW VOLTAGE ACCENT WITH ACCESSORIES	LED MR16	LED-MLV	120V	N	12 w	48 w	48 w	1	DIM		
BIKE SHOP	LD-101	**118**	**118A**	SPARE	1	SPARE	SPARE CIRCUIT FOR FUTURE USE	TBD	TBD	120V	N	w	w	w	1	DIM		
	UNUSED CHANNELS 119-120																	
ELEVATOR CORRIDOR	LD-201	**121**	**121A**	ELEVATOR VESTIBULE PENDANT	4	LT-101	DECORATIVE PENDANT	TBD	TBD	120V	N	60 w	240 w	240 w	1	DIM		
ELEVATOR CORRIDOR	LD-201		**121EM**	ELEVATOR VESTIBULE PENDANT	4	LT-101	DECORATIVE PENDANT	TBD	TBD	120V	N	60 w	240 w	240 w	1	EM-DIM	Y	
ELEVATOR CORRIDOR	LD-201	**122**	**122A**	GENERAL ACCENTS	6	LAA	RECESSED ADJUSTABLE LOW VOLTAGE ACCENT WITH ACCESSORIES	LED MR16	LED-MLV	120V	N	12 w	72 w	72 w	1	DIM		
ELEVATOR CORRIDOR	LD-201		**122EM**	GENERAL ACCENTS	2	LAA	RECESSED ADJUSTABLE LOW VOLTAGE ACCENT WITH ACCESSORIES	LED MR16	LED-MLV	120V	N	12 w	24 w	24 w	1	EM-DIM	Y	
ELEVATOR CORRIDOR	LD-101	**123**	**123A**	ELEVATOR VESTIBULE SCONCES	32	LT-100	DECORATIVE SCONCE	TBD	TBD	120V	N	18 w	576 w	576 w	1	DIM		
	UNUSED CHANNELS 124-125																	

DEPT OF BLDGS121185760 Job Number
ES674289485 Scan Code

FIXTURE LOCATION	SHEET NUM.	CHAN NUM.	CIRC. NUM.	CHANNEL DESCRIPTION	FIX. QTY.	FIX. TYPE	FIXTURE DESCRIPTION	LAMP TYPE	LOAD TYPE	FIX. VOLT	DATA REQ'D	FIX. WATTS	DEVICE WATTS	TOTAL CIRC WATTS	CIR. REQ'D	CONTROL TYPE	FOR EM.	NOTES
MAILROOM	LD-201	**126**	**126A**	MAILROOM DOWNLIGHT	12	LBA	RECESSED DOWNLIGHT	LED MR16	LED-MLV	120V	N	12 w	144 w	144 w	1	DIM		
MAILROOM	LD-201		**126EM**	MAILROOM DOWNLIGHT	10	LBA	RECESSED DOWNLIGHT	LED MR16	LED-MLV	120V	N	12 w	120 w	120 w	1	EM-DIM	Y	
MAILROOM	LD-201	**127**	**127A**	MAILROOM DOWNLIGHT	7	LBA	RECESSED DOWNLIGHT	LED MR16	LED-MLV	120V	N	12 w	84 w	84 w	1	DIM		
MAILROOM	LD-201		**127EM**	MAILROOM DOWNLIGHT	3	LBA	RECESSED DOWNLIGHT	LED MR16	LED-MLV	120V	N	12 w	36 w	36 w	1	EM-DIM	Y	
MAILROOM	LD-201	**128**	**128A**	MAILROOM PENDANT	1	LT-102	DECORATIVE PENDANT	TBD	TBD	120V	N	90 w	90 w	90 w	1	DIM		
CART STORAGE	LD-201	**129**	**129A**	MAILROOM DOWNLIGHT	6	LBA	RECESSED DOWNLIGHT	LED MR16	LED-MLV	120V	N	12 w	72 w	72 w	1	DIM		
	UNUSED CHANNELS 130-150																	
LOBBY TOTALS												TOTAL WATTAGE	3,670 w					

DEPT OF BLDGS121185760 Job Number
ES495645474 Scan Code

FIXTURE LOCATION	SHEET NUM.	CHAN NUM.	CIRC. NUM.	CHANNEL DESCRIPTION	FIX. QTY.	FIX. TYPE	FIXTURE DESCRIPTION	LAMP TYPE	LOAD TYPE	FIX. VOLT	DATA REQ'D	FIX. WATTS	DEVICE WATTS	TOTAL CIRC WATTS	CIR. REQ'D	CONTROL TYPE	FOR EM.	NOTES
GYM				CHANNELS 301-399														
ELEVATOR	LD-202	**201**	**201EM**	ELEVATOR VESTIBULE PENDANT	3	LT-101	DECORATIVE PENDANT	TBD	TBD	120V	N	60 w	180 w	180 w	1	EM-DIM	Y	
ELEVATOR	LD-102	**202**	**202A**	ELEVATOR VESTIBULE SCONCES	16	LT-100	DECORATIVE SCONCE	TBD	TBD	120V	N	18 w	288 w	288 w	1	DIM		
ELEVATOR	LD-202	**203**	**203A**	GYM ACCENTS	1	GAA	RECESSED ADJUSTABLE LOW VOLTAGE ACCENT WITH ACCESSORIES	LED MR16	LED-MLV	120V	N	12 w	12 w	12 w	1	DIM		
	UNUSED CHANNELS 204-205																	
GYM RECEPTION	LD-202	**206**	**206A**	GYM RECEPTION PENDANT	1	LT-106	DECORATIVE PENDANT	TBD	TBD	120V	N	72 w	72 w	72 w	1	DIM		
GYM RECEPTION	LD-202	**207**	**207A**	GYM ACCENTS	7	GAA	RECESSED ADJUSTABLE LOW VOLTAGE ACCENT WITH ACCESSORIES	LED MR16	LED-MLV	120V	N	12 w	84 w	84 w	1	DIM		
GYM RECEPTION	LD-202		**207EM**	GYM ACCENTS	3	GAA	RECESSED ADJUSTABLE LOW VOLTAGE ACCENT WITH ACCESSORIES	LED MR16	LED-MLV	120V	N	12 w	36 w	36 w	1	EM-DIM	Y	
GYM RECEPTION	LD-202	**208**	**208A**	GYM ACCENTS	3	GAA	RECESSED ADJUSTABLE LOW VOLTAGE ACCENT WITH ACCESSORIES	LED MR16	LED-MLV	120V	N	12 w	36 w	36 w	1	DIM		
GYM RECEPTION	LD-202		**208EM**	GYM ACCENTS	2	GAA	RECESSED ADJUSTABLE LOW VOLTAGE ACCENT WITH ACCESSORIES	LED MR16	LED-MLV	120V	N	12 w	24 w	24 w	1	EM-DIM	Y	
	UNUSED CHANNELS 209-210																	
GARDEN ENTRY	LD-202	**211**	**211A**	GYM ACCENTS	8	GAA	RECESSED ADJUSTABLE LOW VOLTAGE ACCENT WITH ACCESSORIES	LED MR16	LED-MLV	120V	N	12 w	96 w	96 w	1	DIM		
GARDEN ENTRY	LD-202		**211EM**	GYM ACCENTS	2	GAA	RECESSED ADJUSTABLE LOW VOLTAGE ACCENT WITH ACCESSORIES	LED MR16	LED-MLV	120V	N	12 w	24 w	24 w	1	EM-DIM	Y	
GARDEN ENTRY	LD-202	**212**	**212A**	GYM CORRIDOR DECORATIVE FIXTURE	2	LT-108	DECORATIVE SURFACE MOUNTED FIXTURE	TBD	TBD	120V	N	8 w	16 w	16 w	1	DIM		
	UNUSED CHANNELS 213-220																	
GYM	LD-202	**221**	**221A**	GYM UPLIGHT	32	LT-109	PENDANT MOUNTED DECORATIVE FIXTURE	TBD	TBD	120V	N	22 w	704 w	704 w	1	DIM		
GYM	LD-202		**221B**	GYM UPLIGHT	24	LT-109	PENDANT MOUNTED DECORATIVE FIXTURE	TBD	TBD	120V	N	22 w	528 w	528 w	1	DIM		
GYM	LD-202		**221C**	GYM UPLIGHT	29	LT-109	PENDANT MOUNTED DECORATIVE FIXTURE	TBD	TBD	120V	N	22 w	638 w	638 w	1	DIM		
GYM	LD-202		**221EM**	GYM UPLIGHT	14	LT-109	PENDANT MOUNTED DECORATIVE FIXTURE	TBD	TBD	120V	N	22 w	308 w	308 w	1	EM-DIM	Y	
GYM	LD-202	**222**	**222A**	GYM CORRIDOR DECORATIVE FIXTURE	9	LT-108	DECORATIVE SURFACE MOUNTED FIXTURE	TBD	TBD	120V	N	8 w	72 w	72 w	1	DIM		
GYM	LD-202		**222EM**	GYM CORRIDOR DECORATIVE FIXTURE	4	LT-108	DECORATIVE SURFACE MOUNTED FIXTURE	TBD	TBD	120V	N	8 w	32 w	32 w	1	EM-DIM	Y	
KIDS ROOM	LD-102	**223**	**223A**	SCREEN UPLIGHT	26	CGA	INGROUND UPLIGHT	LED	LED-MLV	12V	N	3 w	78 w	78 w	1	DIM		
KIDS ROOM	LD-102		**223A**	SCREEN UPLIGHT	3	CGA-X	REMOTE TRANSFORMER	0	LED-MLV	120V	N	w	w					
OFFICE	LD-102		**223B**	SCREEN UPLIGHT	18	CGA	INGROUND UPLIGHT	LED	LED-MLV	12V	N	3 w	54 w	54 w	1	DIM		
OFFICE	LD-102		**223B**	SCREEN UPLIGHT	2	CGA-X	REMOTE TRANSFORMER	0	LED-MLV	120V	N	w	w					
GYM	LD-102		**223C**	SCREEN UPLIGHT	66	CGA	INGROUND UPLIGHT	LED	LED-MLV	12V	N	3 w	198 w	198 w	1	DIM		
GYM	LD-102		**223C**	SCREEN UPLIGHT	7	CGA-X	REMOTE TRANSFORMER	0	LED-MLV	120V	N	w	w					
STUDIO	LD-102		**223D**	SCREEN UPLIGHT	17	CGA	INGROUND UPLIGHT	LED	LED-MLV	12V	N	3 w	51 w	51 w	1	DIM		
STUDIO	LD-102		**223D**	SCREEN UPLIGHT	2	CGA-X	REMOTE TRANSFORMER	0	LED-MLV	120V	N	w	w					
	UNUSED CHANNELS 224																	
GYM	LD-202	**225**	**225A**	GYM TRACK ACCENTS	14	GTB	TRACK MOUNTED ADJUSTABLE THEATRICAL STYLE FIXTURE	LED	LED-MLV	120V	N	14 w	196 w	196 w	1	DIM		
GYM	LD-202		**225A**	GYM TRACK ACCENTS	42 FT	GTA	LINE VOLTAGE TRACK	0	0	V	N	w	w					
	UNUSED CHANNELS 226-230																	

DEPT OF BLDGS121185760 Job Number
ES381648099 Scan Code

FIXTURE LOCATION	SHEET NUM.	CHAN NUM.	CIRC. NUM.	CHANNEL DESCRIPTION	FIX. QTY.	FIX. TYPE	FIXTURE DESCRIPTION	LAMP TYPE	LOAD TYPE	FIX. VOLT	DATA REQ'D	FIX. WATTS	DEVICE WATTS	TOTAL CIRC WATTS	CIR. REQ'D	CONTROL TYPE	FOR EM.	NOTES
BASKETBALL COURT	LD-202	**231**	**231A**	GYM CORRIDOR DECORATIVE FIXTURE	4	LT-111	DECORATIVE SURFACE MOUNTED FIXTURE	TBD	TBD	120V	N	18 w	72 w	90 w	1	DIM		
BASKETBALL COURT	LD-203		**231A**	GYM CORRIDOR DECORATIVE FIXTURE	1	LT-111	DECORATIVE SURFACE MOUNTED FIXTURE	TBD	TBD	120V	N	18 w	18 w					
BASKETBALL COURT	LD-202		**231EM**	GYM CORRIDOR DECORATIVE FIXTURE	6	LT-111	DECORATIVE SURFACE MOUNTED FIXTURE	TBD	TBD	120V	N	18 w	108 w	126 w	1	EM-DIM	Y	
BASKETBALL COURT	LD-203		**231EM**	GYM CORRIDOR DECORATIVE FIXTURE	1	LT-111	DECORATIVE SURFACE MOUNTED FIXTURE	TBD	TBD	120V	N	18 w	18 w				Y	
BASKETBALL COURT	LD-102	**232**	**232A**	STAIR SCONCES	10	LT-125	DECORATIVE SCONCE	TBD	TBD	120V	N	18 w	180 w	360 w	1	DIM		
BASKETBALL COURT	LD-103		**232A**	STAIR SCONCES	10	LT-125	DECORATIVE SCONCE	TBD	TBD	120V	N	18 w	180 w					
BASKETBALL COURT	LD-102	**233**	**233A**	BASKETBALL COURT SCONCES	4	LT-127	DECORATIVE SCONCE	TBD	TBD	120V	N	18 w	72 w	72 w	1	DIM		
BASKETBALL COURT	LD-203	**234**	**234A**	BASKETBALL COURT LIGHTING	12	LT-114	PENDANT MOUNTED HIGH BAY	TBD	MH	120V	N	120 w	1,440 w	1,440 w	1	R		
BASKETBALL COURT	LD-203		**234B**	BASKETBALL COURT LIGHTING	12	LT-114	PENDANT MOUNTED HIGH BAY	TBD	MH	120V	N	120 w	1,440 w	1,440 w	1	R		
BASKETBALL COURT	LD-203		**234C**	BASKETBALL COURT LIGHTING	12	LT-114	PENDANT MOUNTED HIGH BAY	TBD	MH	120V	N	120 w	1,440 w	1,440 w	1	R		
BASKETBALL COURT	LD-203		**234D**	BASKETBALL COURT LIGHTING	8	LT-114	PENDANT MOUNTED HIGH BAY	TBD	MH	120V	N	120 w	960 w	960 w	1	R		
OFFICE	LD-103	**235**	**235A**	SCREEN UPLIGHT	44	CGA	INGROUND UPLIGHT	LED	LED-MLV	12V	N	3 w	132 w	132 w	1	DIM		
OFFICE	LD-103		**235A**	SCREEN UPLIGHT	5	CGA-X	REMOTE TRANSFORMER	0	LED-MLV	120V	N	w	w					
THEATRE	LD-103		**235B**	SCREEN UPLIGHT	29	CGA	INGROUND UPLIGHT	LED	LED-MLV	12V	N	3 w	87 w	87 w	1	DIM		
THEATRE	LD-103		**235B**	SCREEN UPLIGHT	3	CGA-X	REMOTE TRANSFORMER	0	LED-MLV	120V	N	w	w					
LIBRARY	LD-103		**235C**	SCREEN UPLIGHT	37	CGA	INGROUND UPLIGHT	LED	LED-MLV	12V	N	3 w	111 w	111 w	1	DIM		
LIBRARY	LD-103		**235C**	SCREEN UPLIGHT	4	CGA-X	REMOTE TRANSFORMER	0	LED-MLV	120V	N	w	w					
STUDIO	LD-103		**235D**	SCREEN UPLIGHT	17	CGA	INGROUND UPLIGHT	LED	LED-MLV	12V	N	3 w	51 w	51 w	1	DIM		
STUDIO	LD-103		**235D**	SCREEN UPLIGHT	2	CGA-X	REMOTE TRANSFORMER	0	LED-MLV	120V	N	w	w					
	UNUSED CHANNELS 236-240																	
POOL	LD-202	**241**	**241A**	POOL ACCENTS	4	GAW	WET LOCATION RECESSED ADJUSTABLE LOW VOLTAGE ACCENT WITH ACCESSORIES	LED MR16	LED-MLV	120V	N	12 w	48 w	252 w	1	R		
POOL	LD-202		**241A**	SWIMMING POOL DOWNLIGHT	17	GBY	RECESSED WET LOCATION DOWNLIGHT	LED MR16	LED-MLV	120V	N	12 w	204 w					
POOL	LD-202	**241**	**241EM**	POOL ACCENTS	2	GAW	WET LOCATION RECESSED ADJUSTABLE LOW VOLTAGE ACCENT WITH ACCESSORIES	LED MR16	LED-MLV	120V	N	12 w	24 w	96 w	1	EM-R	Y	
POOL	LD-202		**241EM**	SWIMMING POOL DOWNLIGHT	6	GBY	RECESSED WET LOCATION DOWNLIGHT	LED MR16	LED-MLV	120V	N	12 w	72 w					
POOL	LD-202	**242**	**242A**	POOL WALL GRAZE	74 FT	GLB	LINEAR LINE VOLTAGE LED LIGHT STRIP	LED	LED-ELV	120V	N	13 w	962 w	962 w	1	ELV-DIM		
POOL	LD-202		**242B**	POOL WALL GRAZE	106 FT	GLB	LINEAR LINE VOLTAGE LED LIGHT STRIP	LED	LED-ELV	120V	N	13 w	1,378 w	1,378 w	1	ELV-DIM		
	UNUSED CHANNELS 243-250																	
LOCKER ROOMS	LD-202	**251**	**251A**	LOCKER ROOM DECORATIVE FIXTURE	21	LT-112	DECORATIVE SURFACE MOUNTED FIXTURE	TBD	TBD	120V	N	18 w	378 w	378 w	1	R		
LOCKER ROOMS	LD-202		**251EM**	LOCKER ROOM DECORATIVE FIXTURE	9	LT-112	DECORATIVE SURFACE MOUNTED FIXTURE	TBD	TBD	120V	N	18 w	162 w	162 w	1	EM-R	Y	
LOCKER ROOMS	LD-202	**252**	**252A**	SHOWER DOWNLIGHT	4	GBW	RECESSED WET LOCATION DOWNLIGHT	LED MR16	LED-MLV	120V	N	12 w	48 w	48 w	1	R		
LOCKER ROOMS	LD-202	**253**	**253A**	STEAM ROOM LIGHT	6	GJA	SURFACE MOUNTED JELLY JAR	LED	LED-MLV	120V	N	18 w	108 w	108 w	1	R		
LOCKER ROOMS	LD-102	**254**	**254A**	MIRROR SCONCES	7	LT-113	DECORATIVE SCONCE	TBD	TBD	120V	N	18 w	126 w	126 w	1	R		
	UNUSED CHANNELS 255-260																	
CLIMBING WALL	LD-203	**261**	**261A**	CLIMBING WALL LIGHTING	2	GCD	RECESSED FAUX "SKYLIGHT"	LED	LED-ELV	120V	0-10	175 w	350 w	350 w	1	0-10		REQUIRES 0-10V DIMMING
CLIMBING WALL	LD-103	**262**	**262A**	SPARE	1	SPARE	SPARE CIRCUIT FOR FUTURE USE	TBD	TBD	120V	N	w	w	w	1	R		
	UNUSED CHANNELS 263-300																	
GYM TOTALS												TOTAL WATTAGE	13,896 w					

DEPT OF BLDGS121185760 Job Number
ES868886314 Scan Code

CRASH PAD CHANNELS 301-399

FIXTURE LOCATION	SHEET NUM.	CHAN NUM.	CIRC. NUM.	CHANNEL DESCRIPTION	FIX. QTY.	FIX. TYPE	FIXTURE DESCRIPTION	LAMP TYPE	LOAD TYPE	FIX. VOLT	DATA REQ'D	FIX. WATTS	DEVICE WATTS	TOTAL CIRC WATTS	CIR. REQ'D	CONTROL TYPE	FOR EM.	NOTES
ELEVATOR	LD-203	**301**	**301EM**	ELEVATOR VESTIBULE PENDANT	3	LT-101	DECORATIVE PENDANT	TBD	TBD	120V	N	60 w	180 w	180 w	1	EM-DIM	Y	
ELEVATOR	LD-103	**302**	**302A**	ELEVATOR VESTIBULE SCONCES	16	LT-100	DECORATIVE SCONCE	TBD	TBD	120V	N	18 w	288 w	288 w	1	DIM		
ELEVATOR	LD-203	**303**	**303A**	FEATURE ACCENTS	22	CAA	RECESSED ADJUSTABLE LOW VOLTAGE ACCENT WITH ACCESSORIES	LED MR16	LED-MLV	120V	N	12 w	264 w	264 w	1	DIM		
ELEVATOR	LD-203		**303EM**	FEATURE ACCENTS	4	CAA	RECESSED ADJUSTABLE LOW VOLTAGE ACCENT WITH ACCESSORIES	LED MR16	LED-MLV	120V	N	12 w	48 w	48 w	1	EM-DIM	Y	
	UNUSED CHANNELS 304-310																	
CORRIDOR	LD-203	**311**	**311A**	CORRIDOR DECORATIVE FIXTURE	9	LT-108	DECORATIVE SURFACE MOUNTED FIXTURE	TBD	TBD	120V	N	8 w	72 w	72 w	1	DIM		
CORRIDOR	LD-203		**311EM**	CORRIDOR DECORATIVE FIXTURE	7	LT-108	DECORATIVE SURFACE MOUNTED FIXTURE	TBD	TBD	120V	N	8 w	56 w	56 w	1	EM-DIM	Y	
CORRIDOR	LD-203	**312**	**312A**	THEATRE DECORATIVE FIXTURE	1	LT-115	DECORATIVE SURFACE MOUNTED FIXTURE	TBD	TBD	120V	N	60 w	60 w	60 w	1	DIM		
CORRIDOR	LD-203		**312EM**	THEATRE DECORATIVE FIXTURE	1	LT-115	DECORATIVE SURFACE MOUNTED FIXTURE	TBD	TBD	120V	N	60 w	60 w	60 w	1	EM-DIM	Y	
	UNUSED CHANNELS 313-315																	
CORRIDOR	LD-203	**316**	**316A**	CORRIDOR DECORATIVE FIXTURE	2	LT-120	DECORATIVE PENDANT	TBD	TBD	120V	N	18 w	36 w	36 w	1	DIM		
CORRIDOR	LD-203	**317**	**317A**	FEATURE ACCENTS	10	CAA	RECESSED ADJUSTABLE LOW VOLTAGE ACCENT WITH ACCESSORIES	LED MR16	LED-MLV	120V	N	12 w	120 w	120 w	1	DIM		
	UNUSED CHANNELS 318-320																	
THEATRE	LD-203	**321**	**321A**	THEATRE DECORATIVE FIXTURE	10	LT-115	DECORATIVE SURFACE MOUNTED FIXTURE	TBD	TBD	120V	N	60 w	600 w	600 w	1	DIM		
THEATRE	LD-203		**321EM**	THEATRE DECORATIVE FIXTURE	2	LT-115	DECORATIVE SURFACE MOUNTED FIXTURE	TBD	TBD	120V	N	60 w	120 w	120 w	1	EM-DIM	Y	
THEATRE	LD-203	**322**	**322A**	FEATURE ACCENTS	7	CAA	RECESSED ADJUSTABLE LOW VOLTAGE ACCENT WITH ACCESSORIES	LED MR16	LED-MLV	120V	N	12 w	84 w	84 w	1	DIM		
THEATRE	LD-103	**323**	**323A**	CRASH PAD LAMPS	3	LT-137	DECORATIVE LAMP	TBD	TBD	120V	N	40 w	120 w	120 w	1	DIM		
THEATRE	LD-203	**324**	**324A**	STAGE ACCENTS	15	CTB	TRACK MOUNTED ADJUSTABLE THEATRICAL STYLE FIXTURE	LED	LED-MLV	120V	N	14 w	210 w	210 w	1	DIM		
THEATRE	LD-203		**324A**	STAGE ACCENTS	48 FT	CTA	LINE VOLTAGE TRACK	0	0	V	N	w	w					
	UNUSED CHANNELS 325-330																	
LIBRARY	LD-203	**331**	**331A**	LIBRARY DECORATIVE FIXTURE	1	LT-118	DECORATIVE PENDANT	TBD	TBD	120V	N	78 w	78 w	78 w	1	DIM		
LIBRARY	LD-203		**331EM**	LIBRARY DECORATIVE FIXTURE	2	LT-118	DECORATIVE PENDANT	TBD	TBD	120V	N	78 w	156 w	156 w	1	EM-DIM	Y	
LIBRARY	LD-103	**332**	**332A**	LIBRARY TABLE LAMP	6	LT-123	DECORATIVE TABLE LAMP	TBD	TBD	120V	N	36 w	216 w	216 w	1	DIM		
LIBRARY	LD-203	**333**	**333A**	CRASH PAD SURFACE MOUNTED ACCENTS	18	CJA	MONOPOINT WITH ADJUSTABLE THEATRICAL STYLE FIXTURE	LED	LED-MLV	120V	N	14 w	252 w	252 w	1	DIM		
	UNUSED CHANNELS 334																	
LIBRARY	LD-203	**335**	**335A**	FEATURE ACCENTS	10	CAA	RECESSED ADJUSTABLE LOW VOLTAGE ACCENT WITH ACCESSORIES	LED MR16	LED-MLV	120V	N	12 w	120 w	120 w	1	DIM		
LIBRARY	LD-103	**336**	**336A**	LIBRARY SCONCES	8	LT-121	DECORATIVE SCONCE	TBD	TBD	120V	N	18 w	144 w	144 w	1	DIM		
	UNUSED CHANNELS 337-340																	
LIBRARY	LD-203	**341**	**341A**	LIBRARY DECORATIVE FIXTURE	4	LT-117	DECORATIVE PENDANT	TBD	TBD	120V	N	60 w	240 w	240 w	1	DIM		
LIBRARY	LD-203		**341EM**	LIBRARY DECORATIVE FIXTURE	2	LT-117	DECORATIVE PENDANT	TBD	TBD	120V	N	60 w	120 w	120 w	1	EM-DIM	Y	
LIBRARY	LD-203	**342**	**342A**	FEATURE ACCENTS	11	CAA	RECESSED ADJUSTABLE LOW VOLTAGE ACCENT WITH ACCESSORIES	LED MR16	LED-MLV	120V	N	12 w	132 w	132 w	1	DIM		
LIBRARY	LD-203	**343**	**343A**	FEATURE ACCENTS	8	CAA	RECESSED ADJUSTABLE LOW VOLTAGE ACCENT WITH ACCESSORIES	LED MR16	LED-MLV	120V	N	12 w	96 w	96 w	1	ELV-DIM		
LIBRARY	LD-103	**344**	**344A**	CRASH PAD LAMPS	2	LT-137	DECORATIVE LAMP	TBD	TBD	120V	N	40 w	80 w	240 w	1	DIM		
LIBRARY	LD-103		**344A**	CRASH PAD LAMPS	2	LT-138	DECORATIVE TABLE LAMP	TBD	TBD	120V	N	40 w	80 w					
LIBRARY	LD-103		**344A**	CRASH PAD LAMPS	2	LT-139	DECORATIVE FLOOR LAMP	TBD	TBD	120V	N	40 w	80 w					
	UNUSED CHANNELS 345-350																	

FIXTURE LOCATION	SHEET NUM.	CHAN NUM.	CIRC. NUM.	CHANNEL DESCRIPTION	FIX. QTY.	FIX. TYPE	FIXTURE DESCRIPTION	LAMP TYPE	LOAD TYPE	FIX. VOLT	DATA REQ'D	FIX. WATTS	DEVICE WATTS	TOTAL CIRC WATTS	CIR. REQ'D	CONTROL TYPE	FOR EM.	NOTES
GAME ROOM	LD-203	**351**	**351EM**	GAME ROOM PENDANTS	1	LT-119	DECORATIVE PENDANT	TBD	TBD	120V	N	36 w	36 w	36 w	1	EM-DIM	Y	
GAME ROOM	LD-203	**352**	**352EM**	GAME ROOM PENDANTS	1	LT-119	DECORATIVE PENDANT	TBD	TBD	120V	N	36 w	36 w	36 w	1	EM-DIM	Y	
GAME ROOM	LD-203	**353**	**353A**	GAME ROOM DOWNLIGHTS	6	CBC	RECESSED FIXED ACCENT WITH ACCESSORIES	LED MR16	LED-MLV	120V	N	12 w	72 w	72 w	1	DIM		
GAME ROOM	LD-203	**354**	**354A**	FEATURE ACCENTS	6	CAA	RECESSED ADJUSTABLE LOW VOLTAGE ACCENT WITH ACCESSORIES	LED MR16	LED-MLV	120V	N	12 w	72 w	72 w	1	DIM		
GAME ROOM	LD-103	**355**	**355A**	CRASH PAD LAMPS	2	LT-138	DECORATIVE TABLE LAMP	TBD	TBD	120V	N	40 w	80 w	320 w	1	DIM		
GAME ROOM	LD-103		**355A**	CRASH PAD LAMPS	6	LT-144	DECORATIVE TABLE LAMP	TBD	TBD	120V	N	40 w	240 w					
GAME ROOM	LD-203	**356**	**356A**	GAME ROOM PENDANTS	3	LT-120	DECORATIVE PENDANT	TBD	TBD	120V	N	18 w	54 w	54 w	1	DIM		
GAME ROOM	LD-103	**357**	**357A**	LIBRARY SCONCES	9	LT-100	DECORATIVE SCONCE	TBD	TBD	120V	N	18 w	162 w	162 w	1	DIM		
GAME ROOM	LD-203	**358**	**358A**	FEATURE ACCENTS	6	CAA	RECESSED ADJUSTABLE LOW VOLTAGE ACCENT WITH ACCESSORIES	LED MR16	LED-MLV	120V	N	12 w	72 w	72 w	1	DIM		
GAME ROOM	LD-103	**359**	**359A**	SHELF LIGHTING	52 FT	CLC	LINEAR LED LIGHT STRIP	LED	LED-MLV	24V	N	3 w	156 w	156 w	1	DIM		
GAME ROOM	LD-103		**359A**	SHELF LIGHTING	4	CLC-X	REMOTE TRANSFORMER	0	LED-MLV	120V	N	w	w					
	UNUSED CHANNELS 360																	
ARCADE	LD-203	**361**	**361A**	GAME ROOM DOWNLIGHTS	2	CBC	RECESSED FIXED ACCENT WITH ACCESSORIES	LED MR16	LED-MLV	120V	N	12 w	24 w	24 w	1	DIM		
ARCADE	LD-203		**361EM**	GAME ROOM DOWNLIGHTS	2	CBC	RECESSED FIXED ACCENT WITH ACCESSORIES	LED MR16	LED-MLV	120V	N	12 w	24 w	24 w	1	EM-DIM	Y	
ARCADE	LD-203	**362**	**362A**	SPARE	1	SPARE	SPARE CIRCUIT FOR FUTURE USE	TBD	TBD	120V	N	w	w	w	1	DIM		
GOLF LOUNGE	LD-203	**363**	**363A**	GAME ROOM PENDANTS	1	LT-116	DECORATIVE PENDANT	TBD	TBD	120V	N	36 w	36 w	36 w	1	DIM		
GOLF LOUNGE	LD-203		**363EM**	GAME ROOM PENDANTS	1	LT-116	DECORATIVE PENDANT	TBD	TBD	120V	N	36 w	36 w	36 w	1	EM-DIM	Y	
GOLF LOUNGE	LD-203	**364**	**364A**	FEATURE ACCENTS	3	CAA	RECESSED ADJUSTABLE LOW VOLTAGE ACCENT WITH ACCESSORIES	LED MR16	LED-MLV	120V	N	12 w	36 w	36 w	1	DIM		
GOLF LOUNGE	LD-103	**365**	**365A**	CRASH PAD LAMPS	2	LT-140	DECORATIVE TABLE LAMP	TBD	TBD	120V	N	40 w	80 w	80 w	1	DIM		
GOLF SIMULATOR	LD-203	**366**	**366A**	SPARE	1	SPARE	SPARE CIRCUIT FOR FUTURE USE	TBD	TBD	120V	N	w	w	w	1	DIM		
	UNUSED CHANNELS 367-390																	
RESTROOM	LD-203	**391**	**391A**	RESTROOM DECORATIVE FIXTURES	2	LT-112	DECORATIVE SURFACE MOUNTED FIXTURE	TBD	TBD	120V	N	18 w	36 w	36 w	1	DIM		
RESTROOM	LD-203		**391EM**	RESTROOM DECORATIVE FIXTURES	2	LT-112	DECORATIVE SURFACE MOUNTED FIXTURE	TBD	TBD	120V	N	18 w	36 w	36 w	1	EM-DIM	Y	
RESTROOM	LD-203	**392**	**392A**	FEATURE ACCENTS	6	CAA	RECESSED ADJUSTABLE LOW VOLTAGE ACCENT WITH ACCESSORIES	LED MR16	LED-MLV	120V	N	12 w	72 w	72 w	1	DIM		
RESTROOM	LD-103	**393**	**393A**	MIRROR SCONCES	4	LT-113	DECORATIVE SCONCE	TBD	TBD	120V	N	18 w	72 w	72 w	1	DIM		
	UNUSED CHANNELS 394-400																	
CRASH PAD TOTALS												TOTAL WATTAGE	5,544 w					

DEPT OF BLDGS121185760 Job Number
ES544010193 Scan Code

DEPT OF BLDGS121185760 Job Number
ES991744800 Scan Code

FIXTURE LOCATION	SHEET NUM.	CHAN NUM.	CIRC. NUM.	CHANNEL DESCRIPTION	FIX. QTY.	FIX. TYPE	FIXTURE DESCRIPTION	LAMP TYPE	LOAD TYPE	FIX. VOLT	DATA REQ'D	FIX. WATTS	DEVICE WATTS	TOTAL CIRC WATTS	CIR. REQ'D	CONTROL TYPE	FOR EM.	NOTES
62ND FLOOR				CHANNELS 401-499														
ELEVATOR	LD-204	**401**	**401EM**	ELEVATOR VESTIBULE PENDANT	6	LT-101	DECORATIVE PENDANT	TBD	TBD	120V	N	60 w	360 w	360 w	1	EM-DIM	Y	
ELEVATOR	LD-104	**402**	**402A**	ELEVATOR VESTIBULE SCONCES	8	LT-100	DECORATIVE SCONCE	TBD	TBD	120V	N	18 w	144 w	144 w	1	DIM		
ELEVATOR	LD-204	**403**	**403A**	LOUNGE ACCENTS	7	RAA	RECESSED ADJUSTABLE LOW VOLTAGE ACCENT WITH ACCESSORIES	LED MR16	LED-MLV	120V	N	12 w	84 w	84 w	1	DIM		
	UNUSED CHANNELS 404-405																	
CORRIDOR	LD-204	**406**	**406A**	ELEVATOR VESTIBULE PENDANT	3	LT-101	DECORATIVE PENDANT	TBD	TBD	120V	N	60 w	180 w	180 w	1	DIM		
CORRIDOR	LD-204		**406EM**	ELEVATOR VESTIBULE PENDANT	2	LT-101	DECORATIVE PENDANT	TBD	TBD	120V	N	60 w	120 w	120 w	1	EM-DIM	Y	
CORRIDOR	LD-204	**407**	**407A**	LOUNGE ACCENTS	5	RAA	RECESSED ADJUSTABLE LOW VOLTAGE ACCENT WITH ACCESSORIES	LED MR16	LED-MLV	120V	N	12 w	60 w	60 w	1	DIM		
CORRIDOR	LD-204		**407EM**	LOUNGE ACCENTS	3	RAA	RECESSED ADJUSTABLE LOW VOLTAGE ACCENT WITH ACCESSORIES	LED MR16	LED-MLV	120V	N	12 w	36 w	36 w	1	EM-DIM	Y	
	UNUSED CHANNELS 408-410																	
RESTROOM	LD-204	**411**	**411A**	RESTROOM DECORATIVE FIXTURE	3	LT-112	DECORATIVE SURFACE MOUNTED FIXTURE	TBD	TBD	120V	N	18 w	54 w	54 w	1	DIM		
RESTROOM	LD-104	**412**	**412A**	MIRROR SCONCES	6	LT-113	DECORATIVE SCONCE	TBD	TBD	120V	N	18 w	108 w	108 w	1	DIM		
	UNUSED CHANNELS 413-420																	
PDR	LD-204	**421**	**421A**	LOUNGE PENDANTS	1	LT-132	DECORATIVE PENDANT	TBD	TBD	120V	N	18 w	18 w	18 w	1	DIM		
PDR	LD-204		**421EM**	LOUNGE PENDANTS	2	LT-132	DECORATIVE PENDANT	TBD	TBD	120V	N	18 w	36 w	36 w	1	EM-DIM	Y	
PDR	LD-204	**422**	**422A**	LOUNGE ACCENTS	20	RAA	RECESSED ADJUSTABLE LOW VOLTAGE ACCENT WITH ACCESSORIES	LED MR16	LED-MLV	120V	N	12 w	240 w	240 w	1	DIM		
PDR	LD-204	**423**	**423A**	LOUNGE ACCENTS	11	RAA	RECESSED ADJUSTABLE LOW VOLTAGE ACCENT WITH ACCESSORIES	LED MR16	LED-MLV	120V	N	12 w	132 w	132 w	1	DIM		
PDR	LD-204	**424**	**424A**	LOUNGE ACCENTS	6	RAA	RECESSED ADJUSTABLE LOW VOLTAGE ACCENT WITH ACCESSORIES	LED MR16	LED-MLV	120V	N	12 w	72 w	72 w	1	DIM		
PDR	LD-104	**425**	**425A**	LOUNGE LAMPS	4	LT-145	DECORATIVE LAMP	TBD	TBD	120V	N	40 w	160 w	160 w	1	DIM		
PDR	LD-204	**426**	**426A**	KITCHEN DOWNLIGHTS	4	RBA	RECESSED FIXED ACCENT WITH ACCESSORIES	LED MR16	LED-MLV	120V	N	12 w	48 w	48 w	1	DIM		
PDR	LD-204	**427**	**427A**	LOUNGE PENDANTS	2	LT-133	DECORATIVE PENDANT	TBD	TBD	120V	N	18 w	36 w	36 w	1	DIM		
PDR	LD-204		**427EM**	LOUNGE PENDANTS	1	LT-133	DECORATIVE PENDANT	TBD	TBD	120V	N	18 w	18 w	18 w	1	EM-DIM	Y	
PDR	LD-104	**428**	**428A**	TASK LIGHT	6	RUA	LINE VOLTAGE LED TASK LIGHT	LED	LED-ELV	120V	N	10 w	60 w	60 w	1	ELV-DIM		
	UNUSED CHANNELS 429-430																	
PDR	LD-204	**431**	**431A**	LOUNGE PENDANTS	1	LT-132	DECORATIVE PENDANT	TBD	TBD	120V	N	18 w	18 w	18 w	1	DIM		
PDR	LD-204		**431EM**	LOUNGE PENDANTS	1	LT-132	DECORATIVE PENDANT	TBD	TBD	120V	N	18 w	18 w	18 w	1	EM-DIM	Y	
PDR	LD-204	**432**	**432A**	LOUNGE ACCENTS	10	RAA	RECESSED ADJUSTABLE LOW VOLTAGE ACCENT WITH ACCESSORIES	LED MR16	LED-MLV	120V	N	12 w	120 w	120 w	1	DIM		
PDR	LD-204	**433**	**433A**	LOUNGE ACCENTS	11	RAA	RECESSED ADJUSTABLE LOW VOLTAGE ACCENT WITH ACCESSORIES	LED MR16	LED-MLV	120V	N	12 w	132 w	132 w	1	DIM		
PDR	LD-204	**434**	**434A**	LOUNGE ACCENTS	8	RAA	RECESSED ADJUSTABLE LOW VOLTAGE ACCENT WITH ACCESSORIES	LED MR16	LED-MLV	120V	N	12 w	96 w	96 w	1	DIM		
PDR	LD-104	**435**	**435A**	LOUNGE LAMPS	4	LT-145	DECORATIVE LAMP	TBD	TBD	120V	N	40 w	160 w	200 w	1	DIM		
PDR	LD-104		**435A**	LOUNGE LAMPS	1	LT-141	DECORATIVE TABLE LAMP	TBD	TBD	120V	N	40 w	40 w					
	UNUSED CHANNELS 436-440																	
LOUNGE	LD-204	**441**	**441A**	LOUNGE PENDANTS	9	LT-131	DECORATIVE PENDANT	TBD	TBD	120V	N	18 w	162 w	162 w	1	DIM		
LOUNGE	LD-204		**441EM**	LOUNGE PENDANTS	3	LT-131	DECORATIVE PENDANT	TBD	TBD	120V	N	18 w	54 w	54 w	1	EM-DIM	Y	
LOUNGE	LD-204	**442**	**442A**	LOUNGE ACCENTS	11	RAA	RECESSED ADJUSTABLE LOW VOLTAGE ACCENT WITH ACCESSORIES	LED MR16	LED-MLV	120V	N	12 w	132 w	132 w	1	DIM		
LOUNGE	LD-104	**443**	**443A**	LOUNGE LAMPS	4	LT-142	DECORATIVE TABLE LAMP	TBD	TBD	120V	N	40 w	160 w	160 w	1	DIM		
	UNUSED CHANNELS 444-450																	
FIREPLACE	LD-204	**451**	**451A**	LOUNGE ACCENTS	4	RAA	RECESSED ADJUSTABLE LOW VOLTAGE ACCENT WITH ACCESSORIES	LED MR16	LED-MLV	120V	N	12 w	48 w	48 w	1	DIM		
FIREPLACE	LD-204	**452**	**452A**	LOUNGE ACCENTS	2	RAA	RECESSED ADJUSTABLE LOW VOLTAGE ACCENT WITH ACCESSORIES	LED MR16	LED-MLV	120V	N	12 w	24 w	24 w	1	DIM		
FIREPLACE	LD-104	**453**	**453A**	SPARE	1	SPARE	SPARE CIRCUIT FOR FUTURE USE	TBD	TBD	120V	N	w	w	w	1	DIM		
	UNUSED CHANNELS 454-460																	

FIXTURE LOCATION	SHEET NUM.	CHAN NUM.	CIRC. NUM.	CHANNEL DESCRIPTION	FIX. QTY.	FIX. TYPE	FIXTURE DESCRIPTION	LAMP TYPE	LOAD TYPE	FIX. VOLT	DATA REQ'D	FIX. WATTS	DEVICE WATTS	TOTAL CIRC WATTS	CIR. REQ'D	CONTROL TYPE	FOR EM.	NOTES
COVERED DECK	LD-204	**461**	**461A**	DECK PENDANTS	3	LT-129	DECORATIVE PENDANT	TBD	TBD	120V	N	18 w	54 w	54 w	1	DIM		
COVERED DECK	LD-204		**461EM**	DECK PENDANTS	3	LT-129	DECORATIVE PENDANT	TBD	TBD	120V	N	18 w	54 w	54 w	1	EM-DIM	Y	
COVERED DECK	LD-204	**462**	**462A**	SPARE	1	SPARE	SPARE CIRCUIT FOR FUTURE USE	TBD	TBD	120V	N	w	w	w	1	DIM		
COVERED DECK	LD-104	**463**	**463A**	SPARE	1	SPARE	SPARE CIRCUIT FOR FUTURE USE	TBD	TBD	120V	N	w	w	w	1	DIM		
COVERED DECK	LD-104	**464**	**464A**	SPARE	1	SPARE	SPARE CIRCUIT FOR FUTURE USE	TBD	TBD	120V	N	w	w	w	1	DIM		
COVERED DECK	LD-104	**465**	**465A**	LOUNGE LAMPS	5	LT-143	DECORATIVE TABLE LAMP	TBD	TBD	120V	N	40 w	200 w	200 w	1	DIM		
	UNUSED CHANNELS 466-470																	
DECK	LD-104	**471**	**471A**	BENCH LIGHTING	24 FT	RLY	LINEAR LED LIGHT STRIP	LED	LED-MLV	24V	N	3 w	72 w	72 w	1	DIM		
DECK	LD-104		**471A**	BENCH LIGHTING	1	RLY-X	REMOTE TRANSFORMER	0	LED-MLV	120V	N	w	w					
DECK	LD-104	**472**	**472A**	TREE UPLIGHT	4	RJB	STAKE MOUNTED ADJUSTABLE BULLET WITH ACCESSORIES AND INTEGRAL TRANSFORMER	LED	LED-ELV	120V	N	8 w	32 w	32 w	1	ELV-DIM		
DECK	LD-104	**473**	**473A**	PLANTER UPLIGHT	39 FT	RLZ	LINEAR LED LIGHT STRIP	LED	LED-MLV	24V	N	2 w	78 w	78 w	1	0-10		REQUIRES 0-10V DIMMING
DECK	LD-104		**473A**	PLANTER UPLIGHT	5	RLZ-X	REMOTE TRANSFORMER	0	LED-MLV	120V	0-10	w	w					
DECK	LD-204	**474**	**474A**	TERRACE ACCENTS	10	RAZ	WET LOCATION RECESSED ADJUSTABLE LOW VOLTAGE ACCENT WITH ACCESSORIES	LED MR16	LED-MLV	120V	N	12 w	120 w	120 w	1	DIM		
DECK	LD-104	**475**	**475A**	PLANTER UPLIGHT	39 FT	RLZ	LINEAR LED LIGHT STRIP	LED	LED-MLV	24V	N	2 w	78 w	78 w	1	0-10		REQUIRES 0-10V DIMMING
DECK	LD-104		**475A**	PLANTER UPLIGHT	2	RLZ-X	REMOTE TRANSFORMER	0	LED-MLV	120V	0-10	w	w					
	UNUSED CHANNELS 476-500																	
62ND FLOOR TOTALS												TOTAL WATTAGE	3,818 w					

LOCAL CONTROLS:
LIGHTING ZONES TO BE CONTROLLED VIA LOCAL WALLBOX CONTROLS. CONTROL SYSTEM SUPPLIER IS RESPONSIBLE FOR COORDINATING REQUIRED EQUIPMENT, (INCLUDING POWER BOOSTERS AND DIMMER TYPES) TO PROVIDE A FULLY FUNCTIONING DIMMER SYSTEM. CONFIRM LOCATION OF COMPONENTS WITH ARCHITECT AND ELECTRICAL ENGINEER.

2nd FLOOR

PLAYROOM	LD-202	**LD**	**21**	PLAYROOM PENDANT	5	LT-107	DECORATIVE PENDANT	TBD	TBD	120V	N	18 w	90 w	90 w	1	LD		
OFFICE	LD-202	**LD**	**22**	OFFICE DOWNLIGHT	7	GBA	RECESSED DOWNLIGHT	LED MR16	LED-MLV	120V	N	12 w	84 w	84 w	1	LD		
OFFICE	LD-202		**22**	OFFICE DOWNLIGHT	2	GBA	RECESSED DOWNLIGHT	LED MR16	LED-MLV	120V	N	12 w	24 w	24 w	1	EM-LD	Y	
OFFICE	LD-202	**OCC**	**23**	OFFICE DOWNLIGHT	3	GBA	RECESSED DOWNLIGHT	LED MR16	LED-MLV	120V	N	12 w	36 w	36 w	1	OCC		
FITNESS STUDIO	LD-202	**LD**	**24**	FITNESS STUDIO UPLIGHT	10	LT-110	DIMMABLE DIRECT/INDIRECT PENDANT	TBD	TBD	120V	N	56 w	560 w	560 w	1	LD		
FITNESS STUDIO	LD-202		**24**	FITNESS STUDIO UPLIGHT	2	LT-110	DIMMABLE DIRECT/INDIRECT PENDANT	TBD	TBD	120V	N	56 w	112 w	112 w	1	EM-LD	Y	
PLAYROOM RESTROOM	LD-102	**LD**	**25**	MIRROR SCONCES	2	LT-113	DECORATIVE SCONCE	TBD	TBD	120V	N	18 w	36 w	54 w	1	LD		
PLAYROOM RESTROOM	LD-202		**25**	RESTROOM DECORATIVE FIXTURE	1	LT-112	DECORATIVE SURFACE MOUNTED FIXTURE	TBD	TBD	120V	N	18 w	18 w					
RESTROOM	LD-102	**LD**	**26**	MIRROR SCONCES	2	LT-113	DECORATIVE SCONCE	TBD	TBD	120V	N	18 w	36 w	54 w	1	LD		
RESTROOM	LD-202		**26**	RESTROOM DECORATIVE FIXTURE	1	LT-112	DECORATIVE SURFACE MOUNTED FIXTURE	TBD	TBD	120V	N	18 w	18 w					
RESTROOM	LD-102	**LD**	**27**	MIRROR SCONCES	2	LT-113	DECORATIVE SCONCE	TBD	TBD	120V	N	18 w	36 w	54 w	1	LD		
RESTROOM	LD-202		**27**	RESTROOM DECORATIVE FIXTURE	1	LT-112	DECORATIVE SURFACE MOUNTED FIXTURE	TBD	TBD	120V	N	18 w	18 w					
2nd FLOOR TOTALS												TOTAL WATTAGE	1,068 w					

DEPT OF BLDGS121185760 Job Number
ES147192981 Scan Code

DEPT OF BLDGS121185760 Job Number
ES694022505 Scan Code

FIXTURE LOCATION	SHEET NUM.	CHAN NUM.	CIRC. NUM.	CHANNEL DESCRIPTION	FIX. QTY.	FIX. TYPE	FIXTURE DESCRIPTION	LAMP TYPE	LOAD TYPE	FIX. VOLT	DATA REQ'D	FIX. WATTS	DEVICE WATTS	TOTAL CIRC WATTS	CIR. REQ'D	CONTROL TYPE	FOR EM.	NOTES
3rd FLOOR																		
FITNESS STUDIO	LD-203	**LD**	**31**	FITNESS STUDIO UPLIGHT	10	LT-110	DIMMABLE DIRECT/INDIRECT PENDANT	TBD	TBD	120V	N	56 w	560 w	560 w	1	LD		
FITNESS STUDIO	LD-203		**31**	FITNESS STUDIO UPLIGHT	2	LT-110	DIMMABLE DIRECT/INDIRECT PENDANT	TBD	TBD	120V	N	56 w	112 w	112 w	1	EM-LD	Y	
FITNESS STUDIO	LD-203	**LD**	**32**	FITNESS STUDIO UPLIGHT	10	LT-110	DIMMABLE DIRECT/INDIRECT PENDANT	TBD	TBD	120V	N	56 w	560 w	560 w	1	LD		
FITNESS STUDIO	LD-203		**32**	FITNESS STUDIO UPLIGHT	2	LT-110	DIMMABLE DIRECT/INDIRECT PENDANT	TBD	TBD	120V	N	56 w	112 w	112 w	1	EM-LD	Y	
FITNESS STUDIO	LD-203	**LD**	**33**	EQUIPMENT ROOM LIGHTING	1	LT-110	DIMMABLE DIRECT/INDIRECT PENDANT	TBD	TBD	120V	N	56 w	56 w	56 w	1	LD		
TREATMENT ROOM	LD-103	**LD**	**34**	TREATMENT ROOM SCONCES	2	LT-126	DECORATIVE SCONCE	TBD	TBD	120V	N	60 w	120 w	120 w	1	LD		
TREATMENT ROOM	LD-203	**LD**	**35**	TREATMENT ROOM DOWNLIGHTS	1	CBB	RECESSED DOWNLIGHT	LED MR16	LED-MLV	120V	N	12 w	12 w	12 w	1	LD		
TREATMENT ROOM	LD-203		**35**	TREATMENT ROOM DOWNLIGHTS	1	CBB	RECESSED DOWNLIGHT	LED MR16	LED-MLV	120V	N	12 w	12 w	12 w	1	EM-LD	Y	
TREATMENT ROOM	LD-103	**LD**	**36**	MIRROR SCONCES	2	LT-113	DECORATIVE SCONCE	TBD	TBD	120V	N	18 w	36 w	36 w	1	LD		
TREATMENT ROOM	LD-203	**LD**	**38**	SHOWER ACCENTS	2	CAW	WET LOCATION RECESSED ADJUSTABLE LOW VOLTAGE ACCENT WITH ACCESSORIES	LED MR16	LED-MLV	120V	N	12 w	24 w	24 w	1	LD		
TREATMENT ROOM	LD-203		**38**	SHOWER ACCENTS	1	CAW	WET LOCATION RECESSED ADJUSTABLE LOW VOLTAGE ACCENT WITH ACCESSORIES	LED MR16	LED-MLV	120V	N	12 w	12 w	12 w	1	EM-LD	Y	
TREATMENT ROOM	LD-103	**LD**	**39**	TREATMENT ROOM TASK LIGHT	4	CUA	LINE VOLTAGE LED TASK LIGHT	LED	LED-ELV	120V	N	10 w	40 w	40 w	1	LD		
TREATMENT ROOM	LD-103	**LD**	**44**	TREATMENT ROOM SCONCES	2	LT-126	DECORATIVE SCONCE	TBD	TBD	120V	N	60 w	120 w	120 w	1	LD		
TREATMENT ROOM	LD-203	**LD**	**45**	TREATMENT ROOM DOWNLIGHTS	1	CBB	RECESSED DOWNLIGHT	LED MR16	LED-MLV	120V	N	12 w	12 w	12 w	1	LD		
TREATMENT ROOM	LD-203		**45**	TREATMENT ROOM DOWNLIGHTS	1	CBB	RECESSED DOWNLIGHT	LED MR16	LED-MLV	120V	N	12 w	12 w	12 w	1	EM-LD	Y	
TREATMENT ROOM	LD-103	**LD**	**46**	MIRROR SCONCES	2	LT-113	DECORATIVE SCONCE	TBD	TBD	120V	N	18 w	36 w	36 w	1	LD		
TREATMENT ROOM	LD-203	**LD**	**48**	SHOWER ACCENTS	2	CAW	WET LOCATION RECESSED ADJUSTABLE LOW VOLTAGE ACCENT WITH ACCESSORIES	LED MR16	LED-MLV	120V	N	12 w	24 w	24 w	1	LD		
TREATMENT ROOM	LD-203		**48**	SHOWER ACCENTS	1	CAW	WET LOCATION RECESSED ADJUSTABLE LOW VOLTAGE ACCENT WITH ACCESSORIES	LED MR16	LED-MLV	120V	N	12 w	12 w	12 w	1	EM-LD	Y	
TREATMENT ROOM	LD-103	**LD**	**49**	TREATMENT ROOM TASK LIGHT	2	CUA	LINE VOLTAGE LED TASK LIGHT	LED	LED-ELV	120V	N	10 w	20 w	20 w	1	LD		
OFFICE	LD-203	**LD**	**51**	OFFICE DOWNLIGHTS	9	CBA	RECESSED DOWNLIGHT	LED MR16	LED-MLV	120V	N	12 w	108 w	108 w	1	LD		
OFFICE	LD-203	**LD**	**52**	FEATURE ACCENTS	5	CAA	RECESSED ADJUSTABLE LOW VOLTAGE ACCENT WITH ACCESSORIES	LED MR16	LED-MLV	120V	N	12 w	60 w	60 w	1	LD		
OFFICE	LD-203	**LD**	**53**	OFFICE DOWNLIGHTS	3	CBA	RECESSED DOWNLIGHT	LED MR16	LED-MLV	120V	N	12 w	36 w	36 w	1	LD		
OFFICE	LD-203	**LD**	**54**	OFFICE DOWNLIGHTS	4	CBA	RECESSED DOWNLIGHT	LED MR16	LED-MLV	120V	N	12 w	48 w	48 w	1	LD		
OFFICE	LD-203	**LD**	**55**	OFFICE DOWNLIGHTS	6	CBA	RECESSED DOWNLIGHT	LED MR16	LED-MLV	120V	N	12 w	72 w	72 w	1	LD		
OFFICE	LD-203	**LD**	**56**	OFFICE DOWNLIGHTS	4	CBA	RECESSED DOWNLIGHT	LED MR16	LED-MLV	120V	N	12 w	48 w	48 w	1	LD		
OFFICE	LD-203	**LD**	**57**	OFFICE DOWNLIGHTS	3	CBA	RECESSED DOWNLIGHT	LED MR16	LED-MLV	120V	N	12 w	36 w	36 w	1	LD		
3rd FLOOR TOTALS												TOTAL WATTAGE	2,300 w					

FIXTURE LOCATION	SHEET NUM.	CHAN NUM.	CIRC. NUM.	CHANNEL DESCRIPTION	FIX. QTY.	FIX. TYPE	FIXTURE DESCRIPTION	LAMP TYPE	LOAD TYPE	FIX. VOLT	DATA REQ'D	FIX. WATTS	DEVICE WATTS	TOTAL CIRC WATTS	CIR. REQ'D	CONTROL TYPE	FOR EM.	NOTES
62nd FLOOR																		
CLOSET	LD-204	**DOOR**		CLOSET LIGHTING	2	RUC	LINE VOLTAGE LED TASK LIGHT	LED	LED-ELV	120V	N	10 w	20 w	20 w	2	DOOR		
CLOSET	LD-204	**DOOR**		CLOSET LIGHTING	3	RUC	LINE VOLTAGE LED TASK LIGHT	LED	LED-ELV	120V	N	10 w	30 w	30 w	2	DOOR		
GRILL STATION	LD-104	**INTEGRAL**		BBQ TASK LIGHT	1	RJA	BBQ TASK LIGHT	35MR16	MLV	120V	N	35 w	35 w	35 w	1	INTEGRAL		
GRILL STATION	LD-104	**INTEGRAL**		BBQ TASK LIGHT	1	RJA	BBQ TASK LIGHT	35MR16	MLV	120V	N	35 w	35 w	35 w	1	INTEGRAL		
GRILL STATION	LD-104	**INTEGRAL**		BBQ TASK LIGHT	1	RJA	BBQ TASK LIGHT	35MR16	MLV	120V	N	35 w	35 w	35 w	1	INTEGRAL		
GRILL STATION	LD-104	**INTEGRAL**		BBQ TASK LIGHT	1	RJA	BBQ TASK LIGHT	35MR16	MLV	120V	N	35 w	35 w	35 w	1	INTEGRAL		
62nd FLOOR TOTALS												TOTAL WATTAGE	190 w					

do not insert cells below this line

GRAND TOTALS	TOTAL WATTAGE:	30,487 w

ETC® Unison® Paradigm® Wall Mount Touchscreen

Unison Control Series

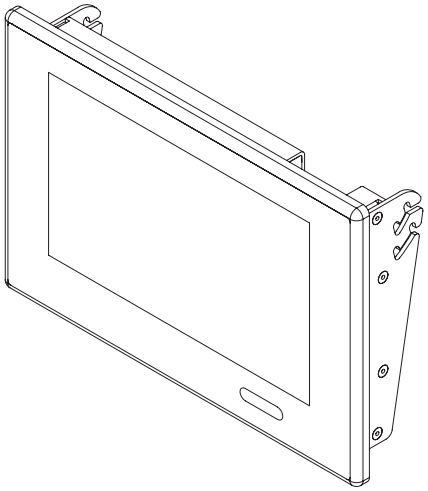

GENERAL INFORMATION

Paradigm Touchscreens use high-resolution, wide-screen, color liquid-crystal displays (LCD) that are bright and easy to read, with controllable back lights. The touch-sensitive panels provide audible and visual feedback that tells you your commands are fully registered. Designed to your specifications with ControlDesigner™ software, the Touchscreen's clear and intuitive graphics guide you quickly through your lighting and control options. Adapt your Touchscreen's unique look, choosing from user definable control elements.

APPLICATIONS

- Churches
- Hotels
- Convention Centers
- Meeting Rooms
- Schools
- Restaurants

FEATURES

- 7" WVGA (800x480) 24-bit color LCD touchscreen
- ColorPicker – Support for HSB color picker for dynamic selection of color with LED and multiparamiter fixtures
- Timed Event creation, edit, and override from setup menu
- Ready-When-You-Are – built in proximity and ambient light sensors make sure the station is ready to respond when you are about to use it
- Secure-it Electronic Lockout – configurable, software based access level control with up to three levels of access utilizing numeric pass codes
- LinkConnect – using Echelon® LonTalk® protocol with LinkPower, the two wire topology-free system gives you the freedom to put stations where you need them
- NetConnect – making use of low-cost, easy to install Cat5 with PoE to connect LCD stations to a networked Paradigm System
- USBConnect – Support for USB flash drives for configuration upload and download
- QuickLoad – SD Media support for upload, and backup of configuration data
- Support of standard or custom graphical control pages

ORDERING INFORMATION

Paradigm Wall Mount Touchsreen

MODEL	DESCRIPTION
P-LCD-_F	Paradigm 7" Flush Mount Touchscreen
P-LCD-_S	Paradigm 7" Surface Mount Touchscreen

Insert station color selection in the __ space provided:

1 = Cream (RAL 9001)
2 = Ivory (RAL 1015)
3 = Gray (RAL 7001)
4 = Black (RAL 9004)
5 = Signal White (RAL 9003)
6 = Clear Anodized Bezel with Black overlay

Paradigm Touchsreen Accessories

MODEL	DESCRIPTION
P-LCD-FBB	Paradigm Touchscreen Flush Mount Back Box
P-LCD-SBB	Paradigm Touchscreen Surface Mount Back Box
P-LCD-SLBB	Paradigm Touchscreen Locking Backbox (Surface)
P-LCD-LC	Paradigm Touchscreen Hinged Locking Cover

ETC Unison® Paradigm® Wall Mount Touchscreen

Unison Control Series

SPECIFICATIONS

FUNCTIONAL

- Built-in setup display, separate from user configured pages
- Configuration upload from the following sources:
  - LightDesigner™ software
  - Paradigm Architectural Control Processor
  - SD media, via built in SD card slot
  - USB Flash Drive, via built in USB port
- Ability to store multiple configurations on one touchscreen and select which configuration is active from an on-screen menu
- Allows at least 30 separate control pages
- Individual zone control
- Preset record and selection
- Room Combine Controls
- Preset, color, sequence, macro, and custom function activation
- Change, initiate, or override timed events
- Multi-level electronic lockout
- Custom controls configured from LightDesigner software
- Custom graphics from ControlDesigner™ software

MECHANICAL

- LED backlit, color LCD display with touchscreen interface
- Aluminum bezel with no visible means of attachment
- Manufacturer provided back boxes for surface and flush mount applications
- Adjustable brightness and contrast for low light conditions
- 7" WVGA, display (800x480) with 24-bit color

ELECTRICAL

- Connect using LinkConnect control network utilizing low voltage Class II wiring
- Topology free and polarity independent wiring over Belden 8471 or equivalent plus (2) #16 for 24vDC AuxPower and (1) #14 ESD drain wire
- Wiring may be bus, loop, home-run or any combination of these
- Optional wiring over CAT5/ 5e with Power over Ethernet for networked systems
- UL and cUL LISTED, CE marked

THERMAL

- Ambient room temperature: 0-40°C / 32-104°F
- Ambient humidity: 10-90% non-condensing

PHYSICAL

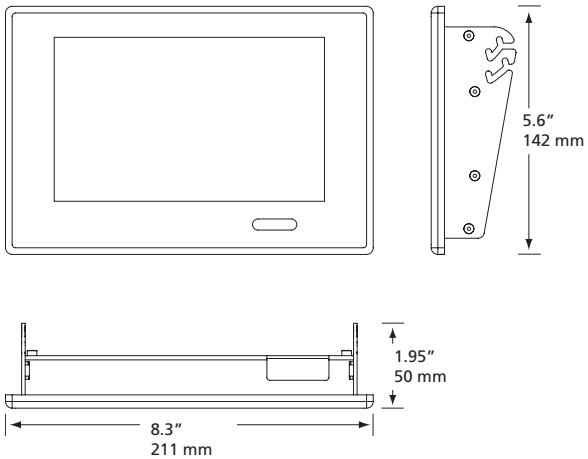

P-LCD Dimensions*

MODEL	HEIGHT		WIDTH		DEPTH	
	inches	mm	inches	mm	inches	mm
P-LCD-_F	5.60	142	8.30	211	1.95	50
P-LCD-_S	5.60	142	8.30	211	1.95	50
P-LCD-FBB	5.35	136	8.00	203	3.25	83
P-LCD-SBB	5.60	142	8.30	211	2.5	64

P-LCD Weights*

MODEL	WEIGHT		SHIPPING WEIGHT	
	lbs	kgs	lbs	kgs
P-LCD-_F	1.5	.68	4	1.8
P-LCD-_S	1.5	.68	4	1.8

*Weights and dimensions typical

Corporate Headquarters • 3031 Pleasant View Rd, PO Box 620979, Middleton WI 53562 0979 USA • Tel +1 608 831 4116 • Fax +1 608 836 1736
London, UK • Unit 26-28, Victoria Industrial Estate, Victoria Road, London W3 6UU, UK • Tel +44 (0)20 8896 1000 • Fax +44 (0)20 8896 2000
Rome, IT • Via Ennio Quirino Visconti, 11, 00193 Rome, Italy • Tel +39 (06) 32 111 683 • Fax +44 (0) 20 8752 8486
Holzkirchen, DE • Ohmstrasse 3, 83607 Holzkirchen, Germany • Tel +49 (80 24) 47 00-0 • Fax +49 (80 24) 47 00-3 00
Hong Kong • Room 1801, 18/F, Tower 1 Phase 1, Enterprise Square, 9 Sheung Yuet Road, Kowloon Bay, Kowloon, Hong Kong • Tel +852 2799 1220 • Fax +852 2799 9325
Web • www.etcconnect.com • Copyright©2010 ETC. All Rights Reserved. All product information and specifications subject to change. 7184L1000 Rev. C Printed in USA 06/10
Unison® products protected by one or more of the following: U.S. Patent No. 5,323,088, 6,849,943, and 5,352,958; European Patent No. 0603333; German Patent No. 69203609; US and International patents pending.
Paradigm products protected by US and International patents pending

ETC Unison® Heritage™ Button Station

Unison Control Series

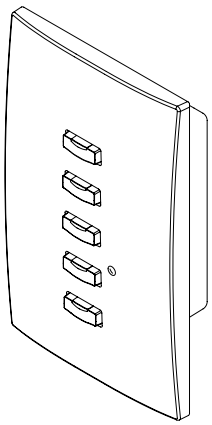

GENERAL INFORMATION

Elegant and clean-lined, Unison Heritage controls are designed to complement – not to compete with – the aesthetics of any interior environment, while being easy to install using LinkConnect. Artful but durable, Heritage stations are engineered to stand up to the daily abuse of busy public areas. The Unison Heritage series of button control stations can be customized to suit any décor and application – available in a wide range of sizes, colors and configurations. Choose from pre-configured button combinations or put stations together to create endless combinations of controls.

APPLICATIONS

- Churches
- Hotels
- Convention Centers
- Meeting Rooms
- Schools
- Restaurants

FEATURES

- LinkConnect – using Echelon's LonTalk® protocol with LinkPower, the two wire topology-free system gives you the freedom to put stations where you need them
- Fastener Free Faceplate System – no visible means of attachment
- ColorCondition – RGB LED's allow for customized control indication on a per button basis, unlocking the conditional logic capabilities of a Paradigm control system
- Forever Legend System – complimentary colored standard or custom legend options using an indelible, laser-marking method
- RemoteDirect – a built in InfraRed (IR) receiver on every station allows for optional IR remote control at every station
- LockOut – configurable control lockout from the push of a button
- Take Control – set the faders on a Heritage fader station and then choose when to gain control of the lighting in a room, at exactly the right moment

ORDERING INFORMATION

Button Stations

MODEL	DESCRIPTION	LEGEND
UH00001- __1F	1/2 gang, 1 button	On/Off
UH00002- __1F	1/2 gang, 2 button	On, Off
UH00005- __1F	1/2 gang, 5 button	Preset 1-4, Off
UH10001- __1F	1 gang, 1 button	On/Off
UH10001- __2F	1 gang, 1 button	Entry
UH10001- __3F	1 gang, 1 button	Panic
UH10002- __1F	1 gang, 2 button	On, Off
UH10002- __2F	1 gang, 2 button	Open, Close
UH10005- __1F	1 gang, 5 button	Preset 1-4, Off
UH10007- __1F	1 gang, 7 button	Raise, Lower, Preset 1-4, Off
UH10010- __1F	1 gang, 10 button	Preset 1-9, Off
UH11K00- __1F	1 gang, 1 keyswitch (maintained*)	Lockout
UH11K01- __1F	1 gang, 1 keyswitch (maintained*), 1 button	Lockout, On/Off
UH11K01- __2F	1 gang, 1 keyswitch (maintained*), 1 button	Lockout, Entry
UH11K01- __2F	1 gang, 1 keyswitch (maintained*), 1 button	Lockout, Panic
UH11K02- __1F	1 gang, 1 keyswitch (maintained*), 2 button	Lockout, On, Off
UH11K02- __2F	1 gang, 1 keyswitch (maintained*), 2 button	Lockout, Open, Close
UH11K05- __1F	1 gang, 1 keyswitch (maintained*), 5 button	Lockout, Preset 1-4, Off

*Keyswitch stations available in momentary configurations.

Notes:

Enter station color code in __ space provided:

1 = Cream (RAL 9001)
2 = Ivory (RAL 1015)
3 = Gray (RAL 7001)
4 = Black (RAL 9004)
5 = Signal White (RAL 9003)

Above stations flush mount (F) in industry standard gang boxes. (By Others)

Also available in surface mount (S) and portable (P) configurations. (Contact ETC)

ETC Unison® Heritage™ Button Station

Unison Control Series

SPECIFICATIONS

GENERAL
- UL and cUL LISTED
- CE Marked

FUNCTIONAL
- Button and keyswitch functions include: preset selection, record mode activation, station lockout, raise, lower, macro activation, zone on/off control, timed event override and wall open/close or toggle
- Custom button functionality programmable via LightDesigner configuration software
- Programmable electronic lockout levels
- Allows for programming of individual lockout levels

MECHANICAL
- Standard configurations with 1, 2, 5, 7 and 10 buttons or 0,1,2,and 5 buttons with a maintained or momentary keyswitch
- Custom button stations available, contact ETC
- Gangable for custom applications
- Enclosed electronics assembly and faceplate included
- Cantilevered switch arrays with removable caps
- No visible means of attachment
- Flush mount in industry standard back box, RACO 690 or equivalent
- Surface mount back-boxes available from manufacturer
- Constructed of injection molded, ABS plastic in five standard colors, matched to RAL standard colors
- Custom colors available with sample
- Indelibly marked legends in a contrasting color
- Integral RGB LED response indicator for each button
- Integrated IR receiver

ELECTRICAL
- Connect via Echelon® LinkPower control network utilizing low voltage Class II wiring
- Topology free and polarity independent wiring over Belden 8471 or equivalent and (1) #14 ESD drain wire
- Wiring may be bus, loop, home-run or any combination of these
- All station terminations are connectorized
- UL and cUL LISTED, CE marked

THERMAL
- Ambient room temperature: 0-40°C / 32-104°F
- Ambient humidity: 30-90% non-condensing

PHYSICAL

Flush Backbox Dimensions*

GANG	HEIGHT		WIDTH		DEPTH	
	inches	mm	inches	mm	inches	mm
1/2	3.75	96	1.3	33	3.25	83
1	3.75	96	2.0	51	2.5	64

1 Gang flush mount back box RACO 690

1/2 Gang flush mount back box provided by ETC

Surface Backbox Dimensions*

GANG	HEIGHT		WIDTH		DEPTH	
	inches	mm	inches	mm	inches	mm
1	4.5	115	2.8	72	2.5	64

Surface mount back boxes provided by ETC

Faceplate Dimensions*

GANG	HEIGHT		WIDTH	
	inches	mm	inches	mm
1/2	4.5	115	1.75	45
1	4.5	115	2.8	71

*Dimensions typical

Corporate Headquarters • 3031 Pleasant View Rd, PO Box 620979, Middleton WI 53562 0979 USA • Tel +1 608 831 4116 • Fax +1 608 836 1736
London, UK • Unit 26-28, Victoria Industrial Estate, Victoria Road, London W3 6UU, UK • Tel +44 (0)20 8896 1000 • Fax +44 (0)20 8896 2000
Rome, IT • Via Ennio Quirino Visconti, 11, 00193 Rome, Italy • Tel +39 (06) 32 111 683 • Fax +44 (0) 20 8752 8486
Holzkirchen, DE • Ohmstrasse 3, 83607 Holzkirchen, Germany • Tel +49 (80 24) 47 00-0 • Fax +49 (80 24) 47 00-3 00
Hong Kong • Room 1801, 18/F, Tower 1 Phase 1, Enterprise Square, 9 Sheung Yuet Road, Kowloon Bay, Kowloon, Hong Kong • Tel +852 2799 1220 • Fax +852 2799 9325
Web • www.etcconnect.com • Copyright©2013 ETC. All Rights Reserved. All product information and specifications subject to change. 7181L1002 Rev. B Printed in USA 01/13

Unison® products protected by one or more of the following U.S. Patenten Numbers 5,323,088, 5,352,958 and 6,849,943; European Pateten Number 0603333; German Patent Number 69203609; US and International patents pending

ETC Unison® Heritage™ Locking Cover

Unison Control Series

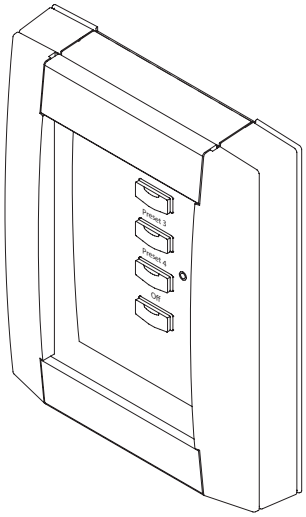

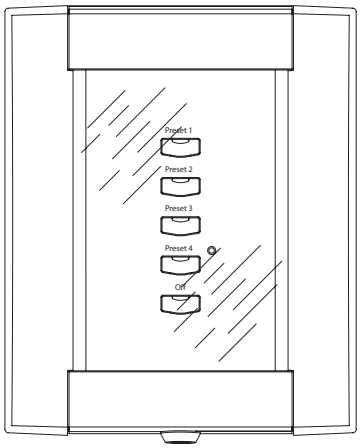

GENERAL INFORMATION

Elegant and clean-lined, Unison Heritage Locking Covers are designed to complement – not to compete with – the aesthetics of any interior environment. Artful but durable, Heritage Locking Covers are engineered to stand up to the daily abuse of busy public areas. A member of the Secure-It family of products, Unison Heritage Locking Covers are designed to prevent unauthorized use of Unison Heritage Button and Fader Stations, while providing protection for the station from accidental damage. Heritage Locking Covers are designed to allow easy access when required while providing visual feedback of the system status through a smoked polycarbonate window.

APPLICATIONS

- Churches
- Hotels
- Convention Centers
- Meeting Rooms
- Schools
- Restaurants

FEATURES

- Secure-It – Decide who has access to the lighting controls, locking out any unwanted actions, while protecting a Heritage Button or Fader station from external damage.
- Designed for use with all Unison Heritage Button, Fader and Keyswitch wall stations

ORDERING INFORMATION

Unison Heritage Sliding Locking Covers

MODEL	DESCRIPTION
SL-1_	1-Gang Flush-mount Sliding Locking Cover
SL-2_	2-Gang Flush-mount Sliding Locking Cover
SL-3_	3-Gang Flush-mount Sliding Locking Cover
SL-4_	4-Gang Flush-mount Sliding Locking Cover
SL-5_	5-Gang Flush-mount Sliding Locking Cover
SL-6_	6-Gang Flush-mount Sliding Locking Cover
SL-7_	7-Gang Flush-mount Sliding Locking Cover

Notes:

Enter color code in __ space provided:

C = Cream (RAL 9001)

I = Ivory (RAL 1015)

G = Gray (RAL 7001)

B = Black (RAL 9004)

W = Signal White (RAL 9003)

Ivory Gray and Signal White are avaialble in single gang configurations only

ETC Unison® Heritage™ Locking Cover

Unison Control Series

SPECIFICATIONS

FUNCTIONAL

- For Flush-mount applications
- Mounts to industry standard flush-mount backboxes (by others)
- Accommodates mounting for upward or downward door opening
- Includes integrated locking cylinder
- Maintains functionality of Unison RemoteDirect Infrared remotes

MECHANICAL

- Standard configurations for 1 gang thru 7 gang applications
- Constructed of injection molded, ABS plastic endcaps with extruded aluminum rails in five standard colors, matched to RAL standard colors
- Smoked polycarbinate window with captive mounting
- Integrated key cylinder with two keys
- No visible means of attachment
- Mounts to industry standard back box (by others)
- Accommodates RemoteDirect Infrared remote transmission through polycarbonate window.

PHYSICAL

Unison Heritage Sliding Locking Covers Dimensions*

MODEL	HEIGHT		WIDTH		DEPTH	
	inches	mm	inches	mm	inches	mm
SL-1	6.36	161.5	5.19	131.8	1.32	33.52
SL-2	6.36	161.5	7.33	186.2	1.32	33.52
SL-3	6.36	161.5	9.14	232.2	1.32	33.52
SL-4	6.36	161.5	10.95	278.1	1.32	33.52
SL-5	6.36	161.5	12.76	324.1	1.32	33.52
SL-6	6.36	161.5	14.58	370.3	1.32	33.52
SL-7	6.36	161.5	16.39	416.3	1.32	33.52

Unison Heritage Sliding Locking Covers Weights*

MODEL	WEIGHT		SHIPPING WEIGHT	
	lbs	kgs	lbs	kgs
SL-1	.94	0.4	2.14	1.0
SL-2	1.26	0.6	2.46	1.1
SL-3	1.56	0.7	2.76	1.3
SL-4	1.86	0.8	3.06	1.4
SL-5	2.13	1.0	3.33	1.5
SL-6	2.37	1.1	3.57	1.6
SL-7	2.67	1.2	3.87	1.7

*Weights and dimensions typical

Corporate Headquarters • 3031 Pleasant View Rd, PO Box 620979, Middleton WI 53562 0979 USA • Tel +1 608 831 4116 • Fax +1 608 836 1736
London, UK • Unit 26-28, Victoria Industrial Estate, Victoria Road, London W3 6UU, UK • Tel +44 (0)20 8896 1000 • Fax +44 (0)20 8896 2000
Rome, IT • Via Ennio Quirino Visconti, 11, 00193 Rome, Italy • Tel +39 (06) 32 111 683 • Fax +44 (0) 20 8752 8486
Holzkirchen, DE • Ohmstrasse 3, 83607 Holzkirchen, Germany • Tel +49 (80 24) 47 00-0 • Fax +49 (80 24) 47 00-3 00
Hong Kong • Room 1801, 18/F, Tower 1 Phase 1, Enterprise Square, 9 Sheung Yuet Road, Kowloon Bay, Kowloon, Hong Kong • Tel +852 2799 1220 • Fax +852 2799 9325
Web • www.etcconnect.com • Copyright©2009 ETC. All Rights Reserved. All product information and specifications subject to change. 7181L1004 Rev. A Printed in USA 02/09

Unison® products protected by one or more of the following U.S. Patenten Numbers 5,323,088, 5,352,958 and 6,849,943; European Pateten Number 0603333; German Patent Number 69203609; US and International patents pending

ETC

Plug-In Stations

Control Series

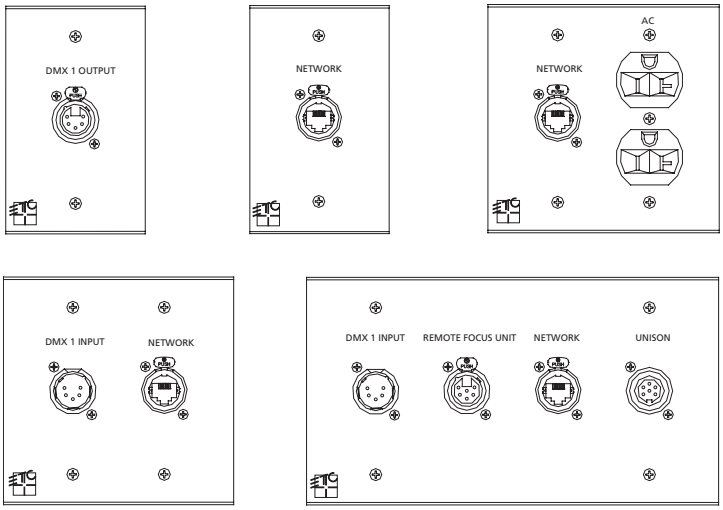

GENERAL INFORMATION

Electronic Control Plug-in Boxes or ECPBs allow lighting controls to connect and operate lighting and other equipment. Connections vary from industry standard DMX512 and Ethernet to portable houselight control and remote control devices.

APPLICATIONS

- An integral part of any complete lighting system installation:
  - Theatres and auditoriums
  - Television Studios
  - Houses of Worship
  - Museums
  - Casinos
  - Hospitality

FEATURES

- Surface or flush mount options
- Fits in most standard back boxes depending on variation
- Data options include:
  - DMX512 Input or Output
  - Remote Focus Unit (RFU)
  - Ethernet Network
  - Portable Unison station
  - Serial or computer interface
  - AC power option (voltage barrier required)

ORDERING INFORMATION

Standard Plug-in Stations

MODEL	DESCRIPTION
ECPB DMXIN	DMX In Plug-in station
ECPB RFU	RFU Plug-in station
ECPB NET	NET Plug-in station
ECPB DMXOUT	DMX Out Plug-in station
ECPB DMX/2-OUT	DMX 2-Out Plug-in station
ECPB DMX/3-OUT	DMX 3-Out Plug-in station
ECPB DMXOUT/RFU	DMX Out, RFU Plug-in station
ECPB DMXIN/RFU	DMX In, RFU Plug-in station
ECPB DMX IN/OUT	DMX In / Out Plug-in station
ECPB DMXIN/2-IN	DMX 1-In / DMX 2-In Plug-in station
ECPB DMXIN/NET	DMX 1-In / NET Plug-in station
ECPB DMXIN/2-IN/RFU/ NET	DMX 1-In, DMX 2-In, RFU, Net Plug-in station
ECPB DMXIN/RFU/NET	DMX In, RFU, NET Plug-in station
ECPB DMXIN/RFU/NET/ Unison	DMX In, RFU, NET, Unison Plug-in station
ECPB NET/AC	NET, AC Plug-in station
ECPB NET/NET	NET, NET Plug-in station
ECPB NET/NET/AC	NET, NET, AC Plug-in station
ECPB RFU/NET	RFU, NET Plug-in station
ECPB RFU/NET/UNISON	RFU, NET, Unison Plug-in station
ECPB UNISON/NET	UNISON, NET Plug-in station

ETC

Plug-In Stations

Control Series

SPECIFICATIONS

GENERAL

- Consist of the appropriate connectors required for the functional intent of the system
- Available with DMX input or output, Remote Focus Unit (RFU), Network, or architectural control connectors

CONNECTOR OPTIONS

- Following standard connectors available for Plug-in Stations:
  - 5-Pin male XLR connectors for DMX input
  - 5-Pin female XLR connectors for DMX output
  - 6-Pin female XLR connectors for RFU connections
  - RJ45 connectors for Network connections - Twisted Pair
  - 6-Pin female DIN connectors for Unison connections
  - DB9 female serial connector for architectural control from a computer
- Custom combinations and custom control connections available.

ELECTRICAL

- Low voltage class 2 wiring
- Operating Voltage: 12/24V Direct Current
- Barriers provided when line-voltage and Class 2 controls are ganged together in the same wallbox
- Terminal block supplied for contractor terminations

PHYSICAL

- Faceplates are .80" aluminum
- Finished in fine texture, scratch-resistant black powder coat
- White silk-screened graphics standard; engraving or custom legends available
- Mounts in an industry standard flush mount back box (supplied by others),
- Surface mount back boxes available from ETC
- Optional U-Bolt Kit for pipe mounting

PHYSICAL

Station Wall Plate Dimensions*

MODEL	WIDTH		HEIGHT		DEPTH	
	inches	mm	inches	mm	inches	mm
Single gang	2.75	70	4.50	114	2.50	64
Two gang	4.56	115	4.50	114	2.50	64
Three gang	6.38	162	4.50	114	3.50	89
Four gang	8.18	208	4.50	114	3.50	89
Five gang	10.00	254	4.50	114	3.50	89
Six gang	11.81	300	4.50	114	3.50	89
Seven gang	13.63	346	4.50	114	3.50	89

Station Back Boxes (supplied by others)

MODEL	SUGGESTED BOX
Single gang	RACO 690 or equivalent
Two gang	RACO 691 or equivalent
Three gang	RACO 697 or equivalent
Four gang	RACO 698 or equivalent
Five gang	RACO 699 or equivalent
Six gang	RACO 695 or equivalent
Seven gang	By ETC

* Custom stations may go up to a seven gang backbox. Gangable back boxes are not acceptable.

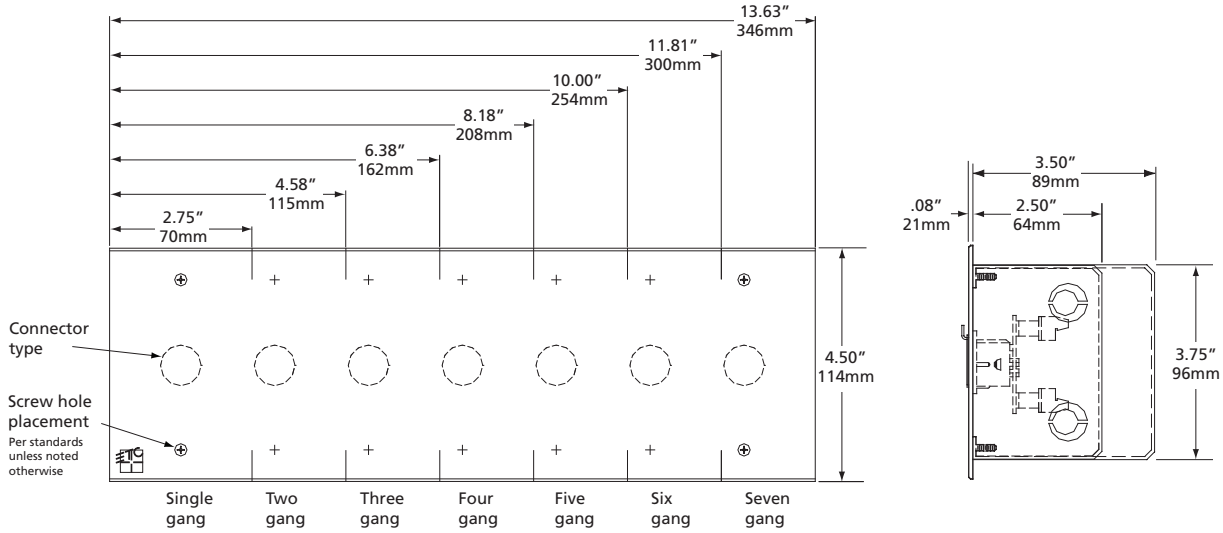

Corporate Headquarters • 3031 Pleasant View Rd, PO Box 620979, Middleton WI 53562 0979 USA • Tel +1 608 831 4116 • Fax +1 608 836 1736
London, UK • Unit 26-28, Victoria Industrial Estate, Victoria Road, London W3 6UU, UK • Tel +44 (0)20 8896 1000 • Fax +44 (0)20 8896 2000
Rome, IT • Via Ennio Quirino Visconti, 11, 00193 Rome, Italy • Tel +39 (06) 32 111 683 • Fax +39 (06) 32 656 990
Holzkirchen, DE • Ohmstrasse 3, 83607 Holzkirchen, Germany • Tel +49 (80 24) 47 00-0 • Fax +49 (80 24) 47 00-3 00
Hong Kong • Room 1801, 18/F, Tower 1 Phase 1, Enterprise Square, 9 Sheung Yuet Road, Kowloon Bay, Kowloon, Hong Kong • Tel +852 2799 1220 • Fax +852 2799 9325
Web • www.etcconnect.com • Copyright©2007 ETC. All Rights Reserved. All product information and specifications subject to change. 1094L1000 Rev.A Printed in USA 10/07

ETC Unison® 100-120V External Control Enclosure

Unison Control Series

100V 120V

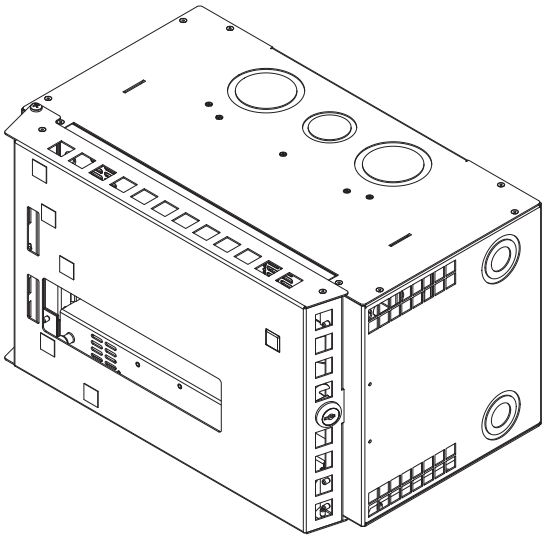

GENERAL INFORMATION

With the ERn enclosure, you choose the features you need for your facility's unique lighting and building control requirements: processing, station support, power options, and networking. By isolating core components as a module, we optimize the system's longevity and performance. Compact external control enclosures available in two sizes; ERn2 and ERn4.

APPLICATIONS

- Churches
- Hotels
- Resorts
- Convention Centers
- Theatres
- Schools
- Restaurants
- Theme Parks
- Cruise Ships

FEATURES

- LinkConnect – using Echelon® LonTalk® protocol with LinkPower, the two wire topology–free system gives you the freedom to put station where you need them
- NetConnect – making use of low–cost, easy to install Cat5/5e with PoE to connect touchscreen stations and other devices to a networked Paradigm System
- RideThru* – Backup processor power for at least 10 seconds to accommodate short term power loss
- BatteryPack* – Backup processor power for at least 90 minutes for long term power loss
- Optional 5 port Power Over Ethernet (PoE) Ethernet Switch*
- Optional Redundant Rack Power Supply*
- Wall-mount or 19" equipment rack-mount

*Option module required

ORDERING INFORMATION

100-120 Volt ERn Enclosure

MODEL	DESCRIPTION
ERn2-W-120*	2-slot wall mount 100-120V Control Enclosure
ERn2-RM-120*	2-slot rack mount 100-120V Control Enclosure
ERn4-W-120*	4-slot wall mount 100-120V Control Enclosure
ERn4-RM-120**	4-slot rack mount 100-120V Control Enclosure

*Also available in 230V CE and 240V UL

** Also available in 240V UL

Control Module Options

MODEL	DESCRIPTION
P-ACP	Paradigm Architectural Control Processor

Option Modules

MODEL	DESCRIPTION
P-SPM	Paradigm Station Power Module
P-REP*	Paradigm Station Repeater Module
P-DREP*	Paradigm Dual Station Repeater Module
ERn-BM	ERn Blank Module

*For use with ERn4 only

Options and Accessories

MODEL	DESCRIPTION
ERn-Net*	ERn Ethernet Switch with Power over Ethernet
ERn-RPS	ERn Redundant Power Supply
URTO	Unison RideThru Option
UBPO*	Unison Battery Pack Option

*For use with wall mount ERn enclosures only

ETC Unison® 100-120V External Control Enclosure

Unison Control Series

SPECIFICATIONS

GENERAL
- External Processing Enclosure designed for one (ERn2) or two (ERn4) control processors plus options and accessories
- Full 2-year Warranty

MECHANICAL
- 18-gauge formed steel construction
- Fine-texture, scratch resistant, epoxy paint
- Wall-mount and 19”rack-mount variants
- Convection Cooled
- Locking door with limited access to control processor
- Tool-free module removal and installation
- 19” equipment rack-mount offers connectorized rear panel for all wiring connections
- Wall-mount offers front access wiring terminations
- Top, bottom and side knockouts for conduit entry

ELECTRICAL
- External control enclosure rated for 100-120 Volts, single phase configurations, 3.5 Amps maximum draw
- 230 Volt CE and 240 Volt UL, single phase configurations available
- Completely pre-wired by the manufacturer
- Designed to support the following wire terminations
  - AC (single phase)
  - 24VDC (2-16AWG)
  - Echelon® LinkPower®
  - (2) configurable DMX512A ports
  - RS232 Bi-directional serial
  - CAT5/5e UTP Ethernet
  - Contact I/O, 4in/4out (14-26AWG)
    - Contact output rated 1A@30vDC
- Contractor supplied input and control wiring
- Factory provided connectors for wiring terminations
- UL and cUL LISTED

THERMAL
- Ambient room temperature: 0-40°C / 32-104°F
- Ambient humidity: 10-90% non-condensing

RACK OPTIONS AND ACCESSORIES

CONTROL PROCESSORS
- Paradigm® Architectural Control Processor (P-ACP)

STATION POWER MODULES
- Station Power Module (P-SPM)
  - Provides Echelon LinkPower for up to 32 Stations
  - Provides 24V auxiliary power for interface and touchscreen stations
  - Provides 1640 feet (500 meters) of station bus from the ERn enclosure
- Station Bus Repeater. (P-REP)
  - Extends Station bus length by an additional 1640 feet (500 meter) segment
  - Accommodates up to 30 additional stations (maximum 62 stations per Processor)
  - Wall and rack mount versions available for mid-span insertion
- Station Bus Dual Repeater (P-DREP)
  - Extends the station Network bus by two additional 1640 feet (500 meter) segments
  - Accommodates up to 30 additional stations (maximum 62 stations per Processor)
  - Wall and rack mount versions available for mid-span insertion

OPTION MODULES
- Ethernet Switch (ERn-NET)
  - Five port Ethernet switch with four ports supplying Power over Ethernet (PoE)
  - 100BaseTX 802.3af PSE compliant
  - For use in wall mount ERn only
- Redundant Power Supply (ERn-RPS)
  - Seamless power for control processors upon failure or removal of the primary power supply
  - Front panel indicator for RPS status

ACCESSORIES
- Unison RideThru Option (URTO)
  - Short term power back-up of control electronics for at least 10 seconds during short power outages
  - Automatically engages when power is lost
  - Recharges during normal power operation
- Unison Battery Pack Option (UBPO)
  - Long term power back-up of control electronics for at least 90 minutes
  - Automatically engages when power is lost
  - Recharges during normal power operation

ETC Unison® 100-120V External Control Enclosure

Unison Control Series

TYPICAL SYSTEM RISER – PARADIGM CONTROL

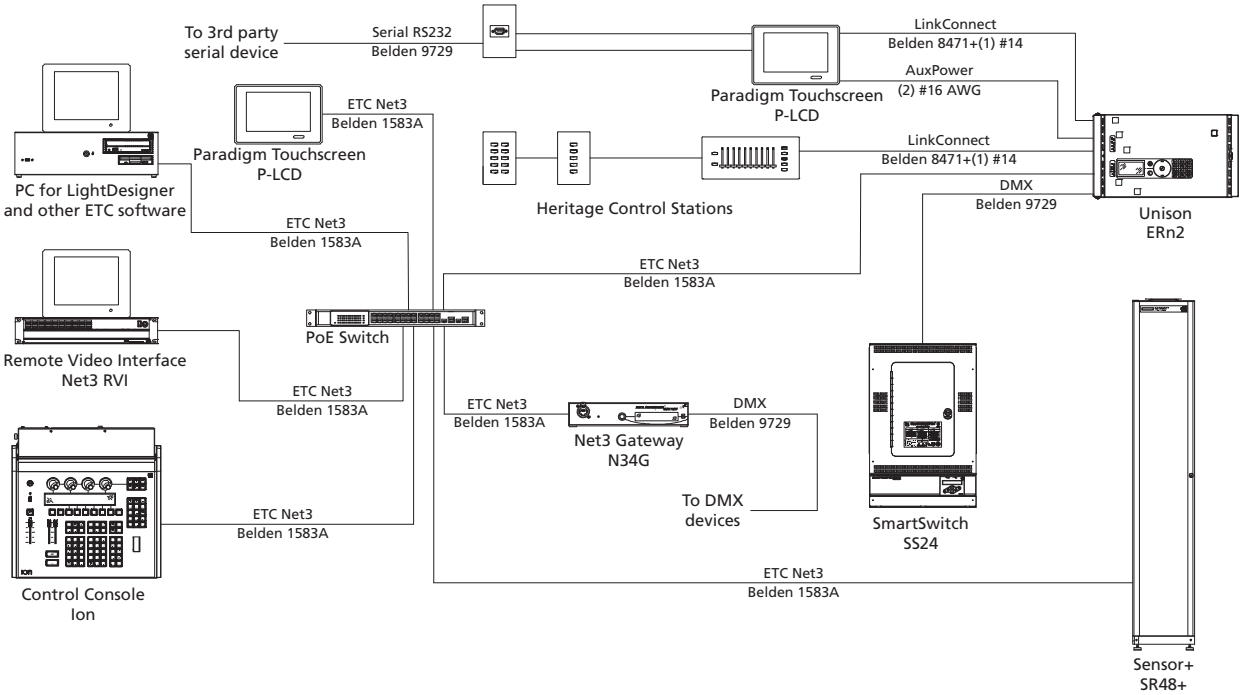

ETC Unison® 100-120V External Control Enclosure

Unison Control Series

PHYSICAL

ERn Rack Mount

ERn2

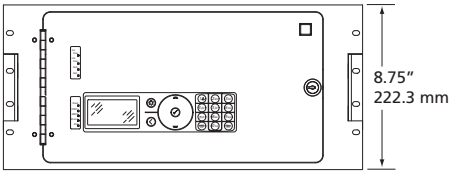

ERn4

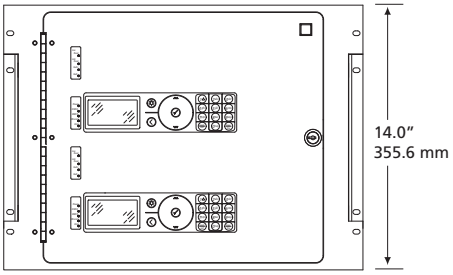

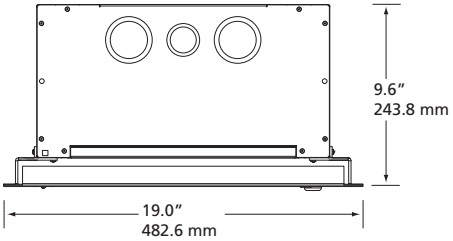

ERn Wall Mount

ERn2

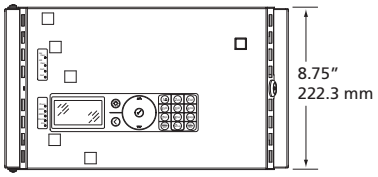

ERn4

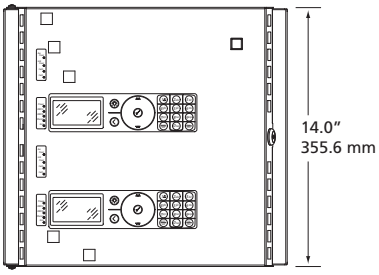

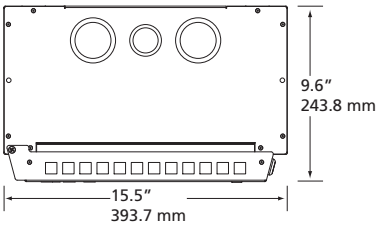

ERn Dimensions*

MODEL	HEIGHT		WIDTH		DEPTH	
	inches	mm	inches	mm	inches	mm
ERn2-W-120	8.75	223	15.5	394	9.6	244
ERn2-RM-120	8.75	223	19.0	483	9.6	244
ERn4-W-120	14.0	356	15.5	394	9.6	244
ERn4-RM-120	14.0	356	19.0	483	9.6	244

ERn Weights*

MODEL	WEIGHT		SHIPPING WEIGHT	
	lbs	kgs	lbs	kgs
ERn2-W-120	15	6.80	20	9.08
ERn2-RM-120	20	9.07	21	9.53
ERn4-W-120	20	9.07	25	11.34
ERn4-RM-120	25	11.34	29	13.15

*Weights and dimensions typical

Corporate Headquarters • 3031 Pleasant View Rd, PO Box 620979, Middleton WI 53562 0979 USA • Tel +1 608 831 4116 • Fax +1 608 836 1736
London, UK • Unit 26-28, Victoria Industrial Estate, Victoria Road, London W3 6UU, UK • Tel +44 (0)20 8896 1000 • Fax +44 (0)20 8896 2000
Rome, IT • Via Ennio Quirino Visconti, 11, 00193 Rome, Italy • Tel +39 (06) 32 111 683 • Fax +44 (0) 20 8752 8486
Holzkirchen, DE • Ohmstrasse 3, 83607 Holzkirchen, Germany • Tel +49 (80 24) 47 00-0 • Fax +49 (80 24) 47 00-3 00
Hong Kong • Room 1801, 18/F, Tower 1 Phase 1, Enterprise Square, 9 Sheung Yuet Road, Kowloon Bay, Kowloon, Hong Kong • Tel +852 2799 1220 • Fax +852 2799 9325
Web • www.etcconnect.com • Copyright©2008 ETC. All Rights Reserved. All product information and specifications subject to change. 7180L1004 Rev. B Printed in USA 06/09

Unison® products protected by one or more of the following U.S. Patenten Numbers 5,323,088, 5,352,958 and 6,849,943; European Pateten Number 0603333; German Patent Number 69203609; US and International patents pending

ETC Paradigm® Architectural Control Processor

Unison® Control Series

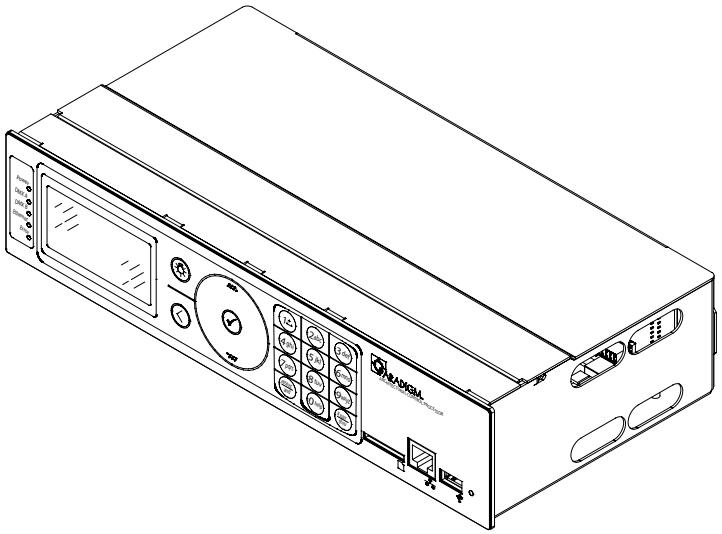

GENERAL INFORMATION

The Paradigm Architectural Control Processor is designed for easy interaction and rapid response. The Paradigm ACP's built in memory and processing power works with vast amounts of lighting control data and is fast enough to process 1024 simultaneous fades over any of its native protocols.

APPLICATIONS

- Churches
- Schools
- Restaurants
- Hotels
- Museums
- Casinos
- Ballrooms

FEATURES

- Designed for use in Unison DRd and ERn enclosures
- Point of Control Interface – easy to read system display shows the user pertinent system information
- LinkConnect – using Echelon® LonTalk® protocol with LinkPower, the two wire topology-free system gives you the freedom to put station where you need them
- NetConnect – making use of low-cost, easy to install Cat5/5e with PoE to connect touchscreen stations and other devices to a networked Paradigm System
- USBConnect – support for USB flash drives for configuration upload and download
- QuickLoad – SD Media support for upload, and backup of configuration data
- LightDesigner™ Access – Web browser interface for easy modification, activation and monitoring of your system configuration and status
- LocalAccess – user control at the interface, including creation of timed events and editing presets or sequences
- Secure-it Access Control – multiple levels of secure user access at the interface

ORDERING INFORMATION

Paradigm Architectural Control Processor

MODEL	DESCRIPTION
P-ACP	Unison Paradigm Architectural Control Processor

Compatible Power and Control Enclosures

MODEL	DESCRIPTION
DRd	Unison Dimming Enclosure (12 and 24 ckts)
ERn	Unison External Control Enclosure

Unison Paradigm System Accessories

MODEL	DESCRIPTION
P-SPM	Unison Paradigm Station Power Module
P-REP	Unison Paradigm ERn Repeater Module
P-DREP	Unison Paradigm ERn Dual Repeater Module
P-REP-W	Unison Paradigm Wall-mount Repeater
P-DREP-W	Unison Paradigm Wall-mount Dual Repeater
P-REP-RM	Unison Paradigm Rack-mount Repeater
P-DREP-RM	Unison Paradigm Rack-mount Dual Repeater

ETC Paradigm® Architectural Control Processor

Unison® Control Series

SPECIFICATIONS

MECHANICAL

- Designed for use in the Unison DRd Rack Enclosure Series and Unison ERn Control Enclosure Series
- Microprocessor based, solid state technology to provide multi-scene lighting and building controls
- Fully contained plug in module with no discrete wire connections
- Tool free installation
- Front panel user interface with backlit LCD and alpha-numeric button panel
- Support of RJ-45 Ethernet, Secure Digital (SD) and Universal Serial Bus (USB) media on the front panel

ELECTRICAL

- No discrete wiring connections required for use in a dimming or control enclosure
- Echelon® LinkPower communications with remote devices, including button stations, button/fader stations, touchscreen stations, sensors, and third party LonMARK compliant products
- Hot swapable
- System configuration and programming information stored in flash memory
- Support of ESTA BSR E1.17 Advanced Control Networks (ACN) and ESTA BSR E1.31 (sACN) Protocols
- Supports EIA-RS232 serial protocol for bi-directional command and communication with third-party equipment
- Two discrete ESTA DMX512A ports, configurable as input or output ports*
- Four dry contact closure inputs
- Four contact closure outputs, rated 1A@30VDC
- UL and cUL LISTED, CE marked

*When used in a Dimming Enclosure, the second DMX port is always an output

THERMAL

- Ambient room temperature: 0-40°C / 32-104°F
- Ambient humidity: 10-90% non-condensing

SPECIFICATIONS

FUNCTIONAL

- Capacity
  - Supports 1024 channels of control per control processor
  - Supports up to 62 stations per control processor
- System
  - Net3 system interoperability including sACN
  - Network Time Protocol for real-time clock synchronization supporting real and astronomical events
  - Supports 2 physical DMX ports, each configurable as an input or output*
  - Provides configuration of DRd dimming operations
  - Up to 20 control processors per system
  - Addition of processors to a system proportionately increases the overall capacities
- Serial Input/Output
  - 8-bit word length, parity selection and 1 or 2 stop bits
  - Fully customizable input and output messages
  - Bi-directional
- Configuration Data
  - Remote upload from a connected PC running LightDesigner or another connected Paradigm ACP
  - Stored in removable solid state memory for easy transfer to another Paradigm ACP
- Local User Interface
  - Control functionality for control channels, zones, fixtures, groups, presets, macros, walls and sequences
  - Ability to schedule timed events (add/edit/delete)
  - Transfer of configuration using removable media
  - Transfer of configuration to and from touchscreen stations using removable media
- User Access Controls
  - 2 User accounts – Administrator and User, local to each processor
- Web User Interface
  - Internal web server accessible via Ethernet port
  - Activate and deactivate presets
  - Schedule timed events (add/edit/delete)
  - Displays status information and log files
  - Configuration of processor settings
- Diagnostics
  - Standard and Critical Event logging
- Stations
  - Connected to a Paradigm processor via topology-free LinkConnect, or star-topology NetConnect
  - Discovery and binding accomplished from the local user interface or LightDesigner
- Operation
  - Configurable DMX output refresh rate
  - Support for 16-bit DMX attributes
  - User configurable arbitration for multiple internal and external source data

ETC Paradigm® Architectural Control Processor

Unison® Control Series

TYPICAL SYSTEM RISER – DRd WITH PARADIGM CONTROL

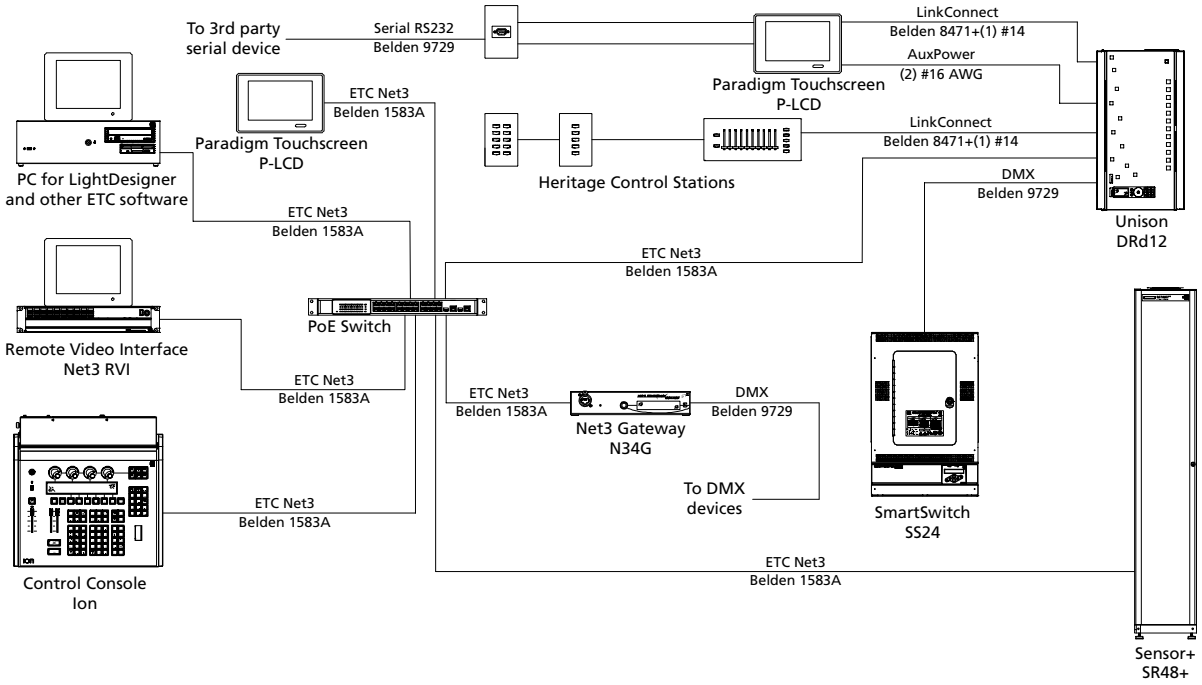

TYPICAL SYSTEM RISER – ERn WITH PARADIGM CONTROL

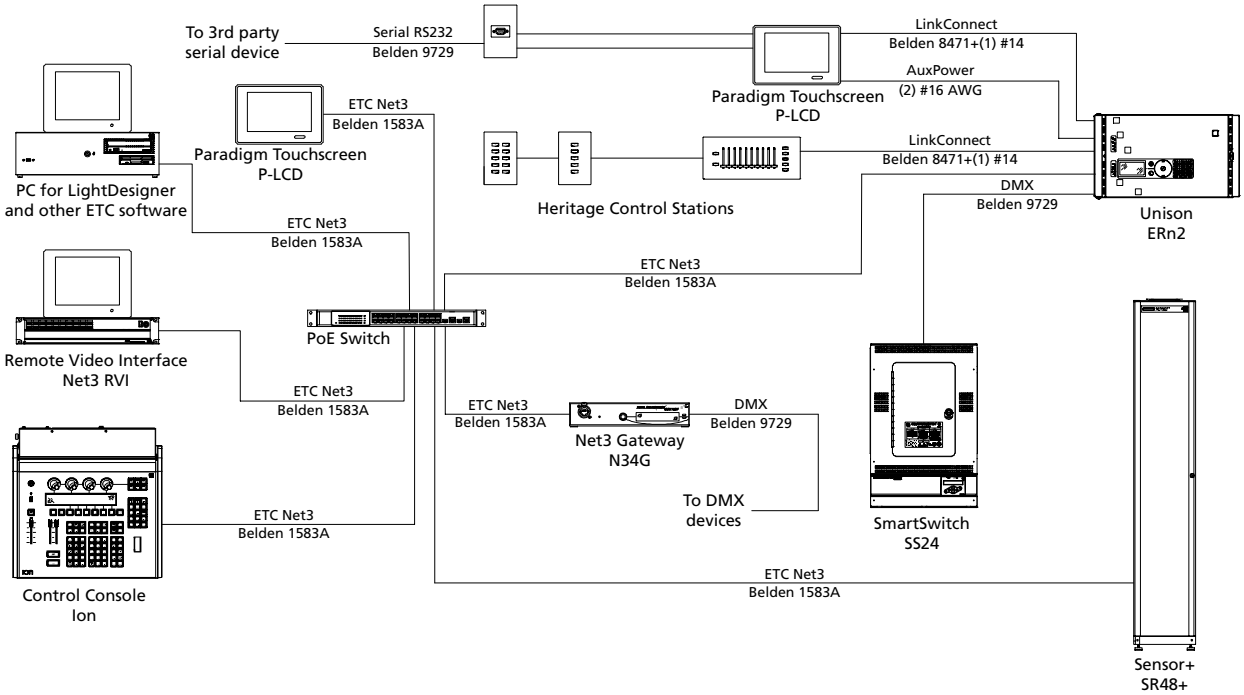

ETC Paradigm® Architectural Control Processor

Unison® Control Series

PHYSICAL

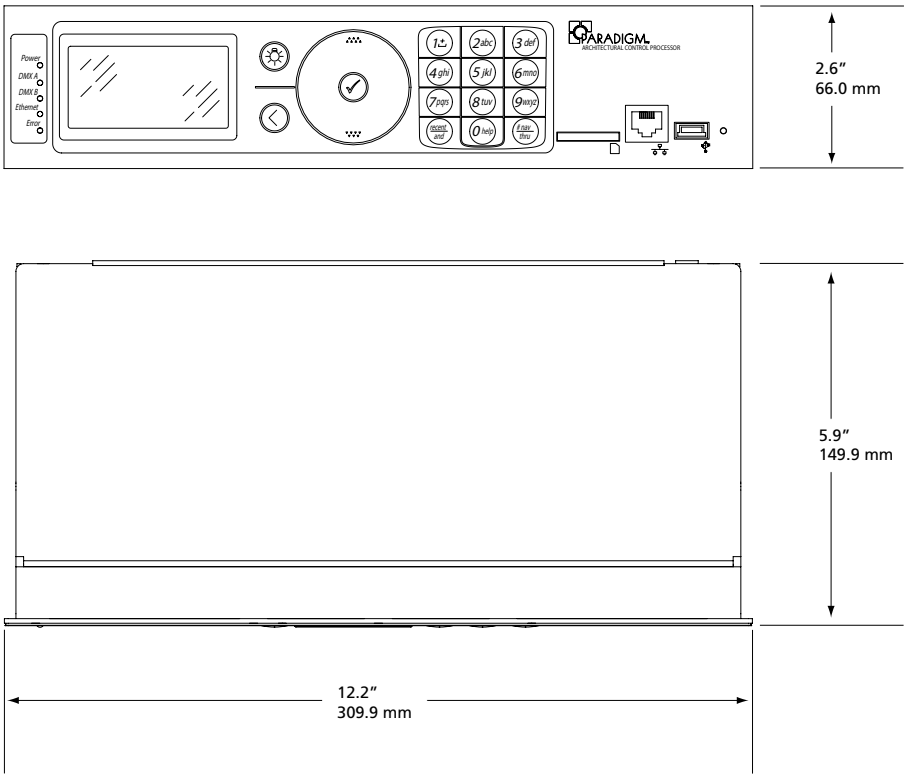

P-ACP Dimensions*

MODEL	HEIGHT		WIDTH		DEPTH	
	inches	mm	inches	mm	inches	mm
P-ACP	2.6	66	12.2	310	6.0	150

P-ACP Weights*

MODEL	WEIGHT		SHIPPING WEIGHT	
	lbs	kgs	lbs	kgs
P-ACP	3.8	1.72	4.8	2.18

*Weights and dimensions typical

Corporate Headquarters • 3031 Pleasant View Rd, PO Box 620979, Middleton WI 53562 0979 USA • Tel +1 608 831 4116 • Fax +1 608 836 1736
London, UK • Unit 26-28, Victoria Industrial Estate, Victoria Road, London W3 6UU, UK • Tel +44 (0)20 8896 1000 • Fax +44 (0)20 8896 2000
Rome, IT • Via Ennio Quirino Visconti, 11, 00193 Rome, Italy • Tel +39 (06) 32 111 683 • Fax +44 (0) 20 8752 8486
Holzkirchen, DE • Ohmstrasse 3, 83607 Holzkirchen, Germany • Tel +49 (80 24) 47 00-0 • Fax +49 (80 24) 47 00-3 00
Hong Kong • Room 1801, 18/F, Tower 1 Phase 1, Enterprise Square, 9 Sheung Yuet Road, Kowloon Bay, Kowloon, Hong Kong • Tel +852 2799 1220 • Fax +852 2799 9325
Web • www.etcconnect.com • Copyright©2013 ETC. All Rights Reserved. All product information and specifications subject to change. 7180L1002 Rev. C Printed in USA 06/13
Unison® products protected by one or more of the following: U.S. Patent No. 5,323,088, 6,849,943, and 5,352,958; European Patent No. 0603333; German Patent No. 69203609; US and International patents pending.
Paradigm products protected by US and International patents pending

ETC Unison® Paradigm® Station Power Module

Unison Control Series

100V 120V 230/240V 277V

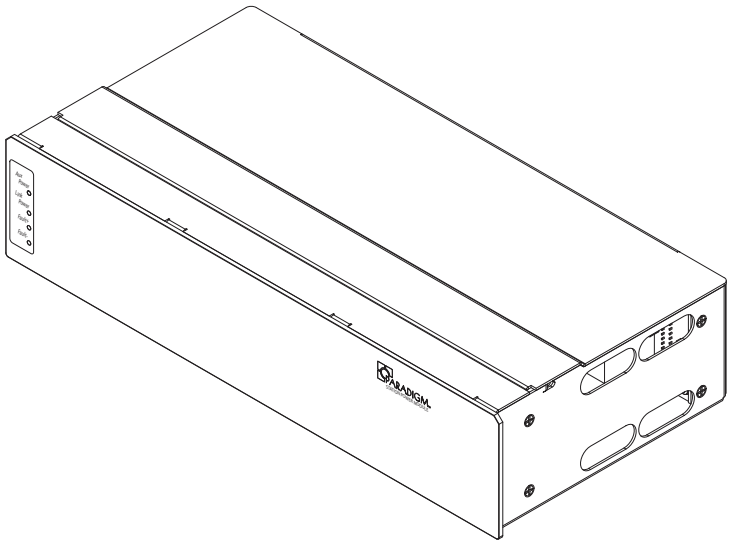

GENERAL INFORMATION

The Paradigm Station Power Module was designed for use with the Unison DRd and ERn enclosures with Paradigm control. The addition of a Station Power Module offers button and fader station support

APPLICATIONS

- Churches
- Schools
- Restaurants
- Hotels
- Museums
- Casinos
- Ballrooms

FEATURES

- Designed for use in Unison DRd and ERn enclosures
- Plug and Play – ready to go out of the box, no software or external programming required
- LinkConnect – Echelon® LonTalk® protocol with LinkPower, the two wire topology-free system gives you the freedom to put station where you need them
  - up to 32 stations
  - up to 500 meters of wiring per system
- Auxiliary power- 24 volt DC power to support Unison interface stations and Paradigm Touchscreens
  - up to 4 touchscreen stations supported per P-SPM

GENERAL

- UL and cUL LISTED
- CE Marked

ORDERING INFORMATION

Paradigm Station Power Module

MODEL	DESCRIPTION
P-SPM	Unison Paradigm Station Power Module

Unison Dimming and Control Enclosures

MODEL	DESCRIPTION
DRd6	Unison 6 slot (12 ckt) Dimming Enclosure
DRd12	Unison 12 slot (24ckt) Dimming Enclosure
ERn2*	Unison 2 slot Control Enclosure
ERn4*	Unison 4 Slot Contorl Enclsoure

*ERn available in Wall and Rack-mount configurations

Unison Paradigm System Components

MODEL	DESCRIPTION
P-ACP	Unison Paradigm Architectural Control Processor
P-REP	Unison Paradigm ERn Repeater Module
P-DREP	Unison Paradigm ERn Dual Repeater Module
P-REP-W	Unison Paradigm Wall-mount Repeater
P-DREP-W	Unison Paradigm Wall-mount Dual Repeater
P-REP-RM	Unison Paradigm Rack-mount Repeater
P-DREP-RM	Unison Paradigm Rack-mount Dual Repeater

ETC Unison® Paradigm® Station Power Module

Unison Control Series

SPECIFICATIONS

FUNCTIONAL
- Provides Echelon® LonTalk® with LinkPower for up to 32 Stations
- Provides 24V auxiliary power for interface and touchscreen stations
- Provides 1640 feet (500 meters) of station bus from the ERn or DRd enclosure

MECHANICAL
- Designed for use in the Unison Dimming (DRd) and Control (ERn) Series Enclosures
- 18-gauge formed steel construction
- Fine-texture, scratch resistant, epoxy paint
- Wall-mount and 19”rack-mount variants available
- Convection Cooled
- Fully contained plug in module with no discrete wire connections
- Tool free installation
- Front panel status indicators

ELECTRICAL
- No discrete wiring connections required for use in a DRd dimming or ERn control enclosure
- Echelon® LinkPower communications with remote devices, including button stations, button/fader stations, touchscreen stations, sensors, and third party LonMARK compliant products
- 24V Auxiliary power for interface and touchscreen stations
- UL and cUL LISTED, CE marked

THERMAL
- Ambient room temperature: 0-40°C / 32-104°F
- Ambient humidity: 10-90% non-condensing

PHYSICAL

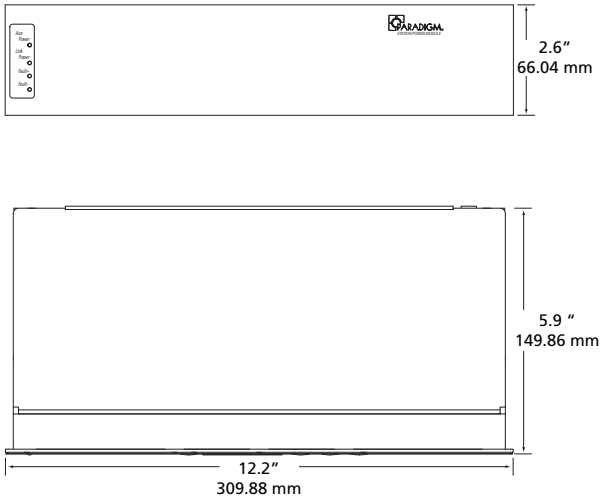

Module Dimensions*

MODEL	HEIGHT		WIDTH		DEPTH	
	inches	mm	inches	mm	inches	mm
P-SPM	2.6	66	12.2	310	5.9	150

Module Weights*

MODEL	WEIGHT		SHIPPING WEIGHT	
	lbs	kgs	lbs	kgs
P-SPM	4.8	2.18	5.8	2.63

*Weights and dimensions typical

Corporate Headquarters • 3031 Pleasant View Rd, PO Box 620979, Middleton WI 53562 0979 USA • Tel +1 608 831 4116 • Fax +1 608 836 1736
London, UK • Unit 26-28, Victoria Industrial Estate, Victoria Road, London W3 6UU, UK • Tel +44 (0)20 8896 1000 • Fax +44 (0)20 8896 2000
Rome, IT • Via Ennio Quirino Visconti, 11, 00193 Rome, Italy • Tel +39 (06) 32 111 683 • Fax +44 (0) 20 8752 8486
Holzkirchen, DE • Ohmstrasse 3, 83607 Holzkirchen, Germany • Tel +49 (80 24) 47 00-0 • Fax +49 (80 24) 47 00-3 00
Hong Kong • Room 1801, 18/F, Tower 1 Phase 1, Enterprise Square, 9 Sheung Yuet Road, Kowloon Bay, Kowloon, Hong Kong • Tel +852 2799 1220 • Fax +852 2799 9325
Web • www.etcconnect.com • Copyright©2008 ETC. All Rights Reserved. All product information and specifications subject to change. 7182L1002 Rev. B Printed in USA 06/09
Unison® products protected by one or more of the following: U.S. Patent No. 5,323,088, 6,849,943, and 5,352,958; European Patent No. 0603333; German Patent No. 69203609; US and International patents pending.
Paradigm products protected by US and International patents pending

ETC

Unison® RideThru Option

Unison Control Series

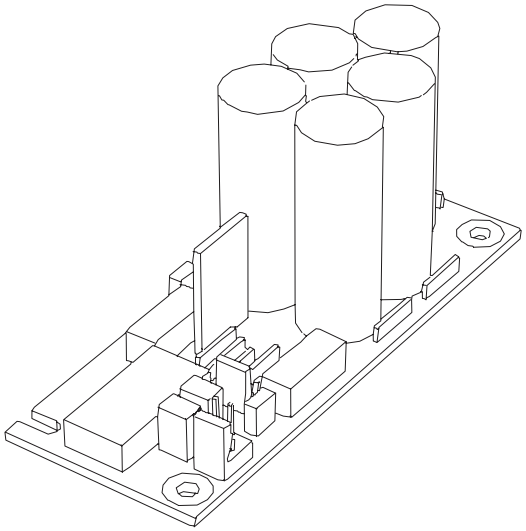

GENERAL INFORMATION

The Unison RideThru option is one of two PowerSupport options designed for use in the ERn Control Enclosure and the DRd Dimming Enclosure when used with a Paradigm Architectural Control Processor. The RideThru option will provide power to the Paradigm Control Processor for at least 12 seconds during brief power outages or dropouts.

APPLICATIONS

- Houses of Worship
- Hotels
- Convention Centers
- Theatres
- Meeting Rooms
- Schools
- Museums
- Restaurants
- Themed Entertainment

FEATURES

- Designed for use in all Unison DRd and ERn Enclosures
- Compatible with Paradigm Architectural Control Processors.
- Provides a minimum of 12 seconds of back-up power for a single Paradigm Architectural Control Processor
- Automatically engages when power is lost
- Recharges during normal power operation

GENERAL

- UL and cUL LISTED
- CE marked

ORDERING INFORMATION

Unison Ride-Thru Option

MODEL	DESCRIPTION
URTO	Unison Ride-Thru Option Kit

Unison Rack Enclosures

MODEL	DESCRIPTION
DRd6	6 Module Rack Enclosure (12 circuits)
DRd12	12 Module Rack Enclosure (24 circuits)
ERn2	2-slot Unison Control Enclosure
ERn4	4-slot Unison Control Enclosure

ERn Control Enclosures are available in rack mount and wall mount configurations

Compatible Control Processors

MODEL	DESCRIPTION
P-ACP	Unison Paradigm Architectural Control Processor

ETC

Unison® RideThru Option

Unison Control Series

SPECIFICATIONS

GENERAL
- Provides power for a single Architectural Control Processor for at least 12 seconds
- UL and cUL LISTED
- CE Marked

FUNCTIONAL
- Designed for use in all Unison DRd and ERn Rack Enclosures
- Compatible with the Paradigm Architectural Control Processor
- Seamless transfer from charge to power output without user intervention
- Recharges during normal power operation
- Prevents the Architectural Control Processor from rebooting when power returns
  - Allows for immediate control of the full system as soon as normal power is present

MECHANICAL
- Mounts inside the Unison DRd or ERn Rack Enclosure
- Required connections made using included two-wire harness with no additional wiring required

ELECTRICAL
- Seamless transfer to battery power upon loss of incoming line power
- Provides 24vDC power for control processor during power loss
- Provides backup power for at least 12 seconds during power loss
- Automatically recharges from power feed
- Charging voltage 10.6V +/- 0.5 volts
- Factory provided connectors for wiring terminations
- UL and cUL LISTED, CE Marked

THERMAL
- Ambient room temperature: 0-40°C / 32-104°F
- Ambient humidity: 30-90% non-condensing.

PHYSICAL

Unison Ride-Thru Option Dimensions*

MODEL	HEIGHT		WIDTH		DEPTH	
	inches	mm	inches	mm	inches	mm
URTO	1.3	33.0	1.1	27.9	2.7	68.6

Unison Ride-Thru Option Weights*

MODEL	WEIGHT		SHIPPING WEIGHT	
	lbs	kgs	lbs	kgs
URTO	0.8	0.4	1.1	0.5

*Weights and dimensions typical

Corporate Headquarters • 3031 Pleasant View Rd, PO Box 620979, Middleton WI 53562 0979 USA • Tel +1 608 831 4116 • Fax +1 608 836 1736
London, UK • Unit 26-28, Victoria Industrial Estate, Victoria Road, London W3 6UU, UK • Tel +44 (0)20 8896 1000 • Fax +44 (0)20 8896 2000
Rome, IT • Via Ennio Quirino Visconti, 11, 00193 Rome, Italy • Tel +39 (06) 32 111 683 • Fax +44 (0) 20 8752 8486
Holzkirchen, DE • Ohmstrasse 3, 83607 Holzkirchen, Germany • Tel +49 (80 24) 47 00-0 • Fax +49 (80 24) 47 00-3 00
Hong Kong • Room 1801, 18/F, Tower 1 Phase 1, Enterprise Square, 9 Sheung Yuet Road, Kowloon Bay, Kowloon, Hong Kong • Tel +852 2799 1220 • Fax +852 2799 9325
Web • www.etcconnect.com • Copyright©2009 ETC. All Rights Reserved. All product information and specifications subject to change. 7080L1006 Rev. A Printed in USA 02/09

Unison® products protected by one or more of the following: U.S. Patent No. 5,323,088, 6,849,943, and 5,352,958; European Patent No. 0603333; German Patent No. 69203609; US and International patents pending.

ETC Unison® ERn Ethernet Option Module

Unison Control Series

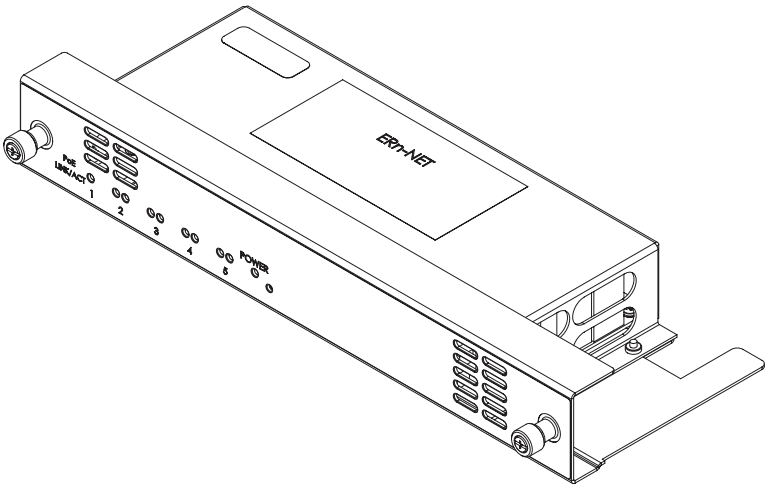

GENERAL INFORMATION

The Unison ERn Ethernet Switch option is designed to provide five Ethernet ports, four with Power over Ethernet, for use with Unison ERn control enclosures.

APPLICATIONS

- Houses of Worship
- Hotels
- Convention Centers
- Theatres
- Meeting Rooms
- Schools
- Museums
- Restaurants
- Themed Entertainment

FEATURES

- Designed for use in wall mount ERn Control Enclosures
- Compatible with Paradigm Architectural Control Processors
- NetConnect – making use of low-cost, easy to install Cat5 with PoE to connect a touchscreen stations to a networked Paradigm System
- Provides five ports of Ethernet, four of which provide Power over Ethernet (PoE)

GENERAL

- UL and cUL LISTED
- CE marked

ORDERING INFORMATION

Unison ERn Ethernet Option

MODEL	DESCRIPTION
ERn-NET	Unison ERn 5-port Ethernet Switch with PoE

Note: Cannot be used with the ERn-RPS option

Unison Rack Enclosures

MODEL	DESCRIPTION
ERn2-WM	2-slot Unison Wall-mount Control Enclosure
ERn4-WM	4-slot Unison Wall-mount Control Enclosure

Note: Compatible with wall-mount ERn enclosures only

Compatible Control Processors

MODEL	DESCRIPTION
P-ACP	Unison Paradigm Architectural Control Processor

ETC Unison® ERn Ethernet Option Module

Unison Control Series

SPECIFICATIONS

GENERAL
- UL and cUL LISTED
- CE Marked

FUNCTIONAL
- Designed for use wall mount ERn Control Enclosures
- Compatible with the Paradigm Architectural Control Processor
- Provides five ports of Ethernet, four with PoE

MECHANICAL
- Mounts inside the bottom option slot of wall mount Unison ERn Rack Enclosures
- No additional internal wiring required
- Includes front panel status indicators for module power status, Ethernet activity and PoE power status

ELECTRICAL
- Powered by main power feed from ERn enclosures without the need for additional wiring
- 100BaseTX data rate
- Auto MDI/MDIX
- Four ports provide PoE power
- Maximum 30 watt draw across four PoE ports
- 802.3af PSE compliant
- UL and cUL LISTED, CE Marked

THERMAL
- Ambient room temperature: 0-40°C / 32-104°F
- Ambient humidity: 30-90% non-condensing

PHYSICAL

ERn Ethernet Dimensions*

MODEL	HEIGHT		WIDTH		DEPTH	
	inches	mm	inches	mm	inches	mm
ERn-NET	1.75	44.5	12.0	304.8	5.15	130.8

ERn Ethernet Weights*

MODEL	WEIGHT		SHIPPING WEIGHT	
	lbs	kgs	lbs	kgs
ERn-NET	2.5	1.1	4.1	1.9

*Weights and dimensions typical

Corporate Headquarters • 3031 Pleasant View Rd, PO Box 620979, Middleton WI 53562 0979 USA • Tel +1 608 831 4116 • Fax +1 608 836 1736
London, UK • Unit 26-28, Victoria Industrial Estate, Victoria Road, London W3 6UU, UK • Tel +44 (0)20 8896 1000 • Fax +44 (0)20 8896 2000
Rome, IT • Via Ennio Quirino Visconti, 11, 00193 Rome, Italy • Tel +39 (06) 32 111 683 • Fax +44 (0) 20 8752 8486
Holzkirchen, DE • Ohmstrasse 3, 83607 Holzkirchen, Germany • Tel +49 (80 24) 47 00-0 • Fax +49 (80 24) 47 00-3 00
Hong Kong • Room 1801, 18/F, Tower 1 Phase 1, Enterprise Square, 9 Sheung Yuet Road, Kowloon Bay, Kowloon, Hong Kong • Tel +852 2799 1220 • Fax +852 2799 9325
Web • www.etcconnect.com • Copyright©2009 ETC. All Rights Reserved. All product information and specifications subject to change. 7180L1020 Rev. A Printed in USA 01/09
Unison® products protected by one or more of the following: U.S. Patent No. 5,323,088, 6,849,943, and 5,352,958; European Patent No. 0603333; German Patent No. 69203609; US and International patents pending.

ETC Paradigm® Wall and Rack-Mount Repeaters

Unison® Control Series

100V 120V 230/240V

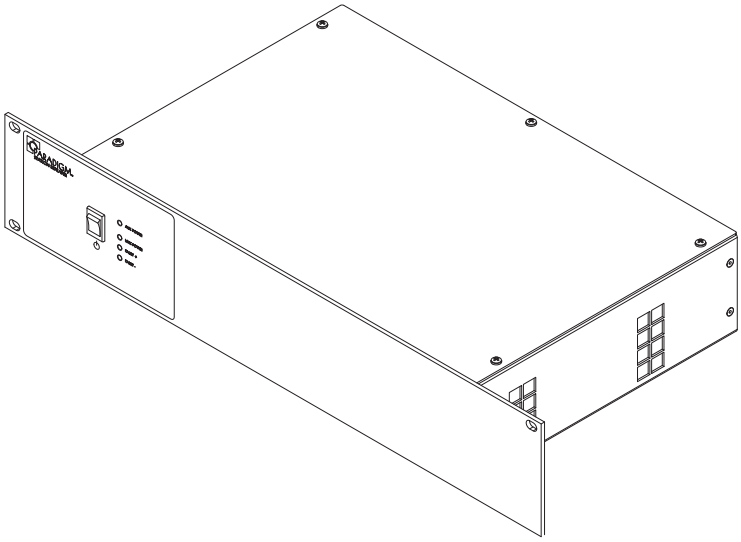

GENERAL INFORMATION

A member of ETC's Paradigm family of lighting control the Paradigm Station Repeater Module was designed for use with the Unison ERn control enclosures with Paradigm control. The Paradigm Station Repeater Module offers additional station support to a Paradigm system when added to a Station Power Module.

APPLICATIONS

- Churches
- Schools
- Restaurants
- Hotels
- Museums
- Casinos
- Ballrooms

FEATURES

- Designed for use with Unison Paradigm Systems
- Plug and Play – ready to go out of the box, no software or external programming required
- LinkConnect – Echelon's LonTalk® protocol with LinkPower, the two wire topology-free system gives you the freedom to put station where you need them
  - Up to 30 additional stations
  - One additional 500 meter segment of wiring per system with Repeater
  - Two additional 500 meter segments of wiring per system with Dual Repeate
- Auxiliary power- 24 volt DC power to support Unison interface stations Paradigm Touchscreens
  - Up to 4 touchscreen stations may be used per P-REP or P-DREP

GENERAL

- UL and cUL LISTED
- CE Marked

ORDERING INFORMATION

Paradigm Wall and Rack-Mount Repeters

MODEL	DESCRIPTION
P-REP-W	Paradigm Wall mount Repeater Module
P-REP-RM	Paradigm Rack mount Repeater Module
P-DREP-W	Paradigm Wall mount Dual Repeater Module
P-DREP-RM	Paradigm Rack mount Dual Repeater Module

Related Products

MODEL	DESCRIPTION
ERn2-W*	2 slot wall mount Control Enclosure
ERn2-RM*	2 slot rack mount Control Enclosure
ERn4-W*	4 slot wall mount Control Enclosure
ERn4-RM**	4 slot rack mount Control Enclosure

*Available in 100-120V, 230V CE and 240V

** Available in 100-120V and 240V only

Unison DRd Rack Enclosures

MODEL	DESCRIPTION
DRd6*	4 slot wall mount 100-120V Control Enclosure
DRd12*	4 slot rack mount 100-120V Control Enclosure

*Available in 100-120V, 230V CE, 240V and 277V

ETC Paradigm® Wall and Rack-mount Repeaters

Unison® Control Series

SPECIFICATIONS

FUNCTIONAL

- Provides Echelon® LonTalk® with LinkPower for up to 30 additional stations
- Provides 24V auxiliary power for interface and touchscreen stations
- Repeater module provides an additional 1640 feet (500 meters) of station bus from the ERn enclosure
- Dual Repeater module provides two additional 1640 feet (500 meter) station bus segments from the ERn enclosure

MECHANICAL

- Designed for use with Unison Paradigm Systems
- 18-gauge formed steel construction
- Fine-texture, scratch resistant, epoxy paint
- Convection Cooled
- Front panel status indicators
- Wall-mount offers front access wiring terminations
- Top, bottom and side knockouts for conduit entry
- Clearly labeled LinkConnect station bus status indicators

ELECTRICAL

- 100-240 Volts, 50/60 Hz power input
- Echelon LonTalk with LinkPower communications using Class 2 topology-free, polarity independent station wiring. Wiring may be bus, loop, home-run, or any combination utilizing Belden type 8471 or equivalent, and (1) #14 ESD drain wire
- Front panel power switch (Rack-mount only)
- Contractor supplied input and control wiring
- Factory provided connectors for wiring terminations
- 24V Auxiliary power for interface and touchscreen stations
- UL and cUL LISTED, CE marked

THERMAL

- Ambient room temperature: 0-40°C / 32-104°F
- Ambient humidity: 10-90% non-condensing

PHYSICAL

Wall Mount

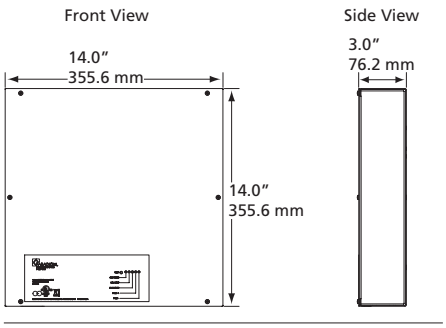

Rack Mount

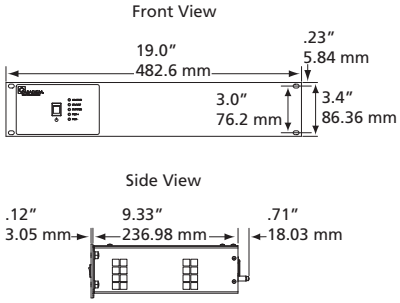

Product Dimensions*

MODEL	HEIGHT		WIDTH		DEPTH	
	inches	mm	inches	mm	inches	mm
P-REP-W	14	356	14	356	3.0	76.2
P-REP-RM	3.5	89	19	483	11	280
P-DREP-W	14	356	14	356	3.0	76.2
P-DREP-RM	3.5	89	19	483	11	280

Product Weights*

MODEL	WEIGHT		SHIPPING WEIGHT	
	lbs	kgs	lbs	kgs
P-REP-W	14	6.4	20	9.1
P-REP-RM	13	5.9	19	8.6
P-DREP-W	14	6.4	20	9.1
P-DREP-RM	13	5.9	19	8.6

*Weights and dimensions typical

Corporate Headquarters • 3031 Pleasant View Rd, PO Box 620979, Middleton WI 53562 0979 USA • Tel +1 608 831 4116 • Fax +1 608 836 1736
London, UK • Unit 26-28, Victoria Industrial Estate, Victoria Road, London W3 6UU, UK • Tel +44 (0)20 8896 1000 • Fax +44 (0)20 8896 2000
Rome, IT • Via Ennio Quirino Visconti, 11, 00193 Rome, Italy • Tel +39 (06) 32 111 683 • Fax +44 (0) 20 8752 8486
Holzkirchen, DE • Ohmstrasse 3, 83607 Holzkirchen, Germany • Tel +49 (80 24) 47 00-0 • Fax +49 (80 24) 47 00-3 00
Hong Kong • Room 1801, 18/F, Tower 1 Phase 1, Enterprise Square, 9 Sheung Yuet Road, Kowloon Bay, Kowloon, Hong Kong • Tel +852 2799 1220 • Fax +852 2799 9325
Web • www.etcconnect.com • Copyright©2008 ETC. All Rights Reserved. All product information and specifications subject to change. 7182L1004 Rev. B Printed in USA 06/09
Unison® products protected by one or more of the following: U.S. Patent No. 5,323,088, 6,849,943, and 5,352,958; European Patent No. 0603333; German Patent No. 69203609; US and International patents pending.
Paradigm products protected by US and International patents pending

ETC®

Sensor3™ 120V UL Racks

100V 120V

Sensor3 SR Series

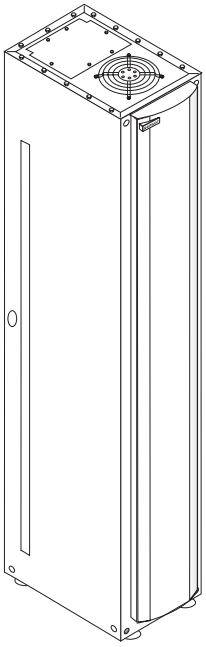

GENERAL INFORMATION

Sensor3 dimming systems provide high density, professional features and exceptional reliability for lighting applications that require the best the entertainment industry can offer.

APPLICATIONS

- Professional and educational theatre
- Production studios
- Concert and performance halls
- Themed retail and dining
- Multi-use Convention Centers
- Houses of Worship

FEATURES

- High dimmer density
- Up to two 2.4kW dimmers per module
- 6, 12, 24, and 48 module racks available
- Rugged industrial construction
- Installation flexibility
- Adaptable modular design
- 100,000A Short Circuit Current Rating (SCCR)
- Advanced configuration editing built into rack
- Stores up to 64 backup presets in memory
- Direct Ethernet control signal input (Net3™, sACN
- Two DMX512-A inputs
- Standard system and rack monitoring with diagnostic reporting
- Supports ETC Dimmer Doubling™

ACCESSORIES

- Dimmer Doubler
- Sound Suppression Hood
- Floor pedestal for 24-module rack
- Document holder

ORDERING INFORMATION

Installation Racks

MODEL	DESCRIPTION
SR3-48	Sensor3 48-Module Rack
SR3-24	Sensor3 24-Module Rack
SR3-12	Sensor3 12-Module Rack
SR3-6	Sensor3 6-Module Rack
SR3-24 1P	Sensor3 24-Module Single Phase Rack
SR3-12 1P	Sensor3 12-Module Single Phase Rack
SR3-6 1P	Sensor3 6-Module Single Phase Rack

Rack Options*

MODEL	DESCRIPTION
AT48	Amp-Trap fuse option for 48-module rack
AT24	Amp-Trap fuse option for 24-module rack
AT12	Amp-Trap fuse option for 12-module rack
BK48	Bus kit for 2 – 48-module racks
BK24	Bus kit for 2 – 24-module racks
BK12	Bus kit for 2 – 12-module racks
AUX30-48	30″ Auxiliary Rack(s) for 48-module rack
AUX19-48	19″ Auxiliary Rack(s) for 48-module rack
AUX19-24	19″ Auxiliary Rack(s) for 24-module rack
AUX19-12	19″ Auxiliary Rack(s) for 12-module rack

*Vibration reduction mounts available for all Sensor3 racks. Contact ETC for details.
Note: Power feeds above 800A up to 2000A require addition of a 30″ auxiliary rack.

Rack Accessories

MODEL	DESCRIPTION
SSSh24-48	Sensor Sound Suppression Hood – large
SSSh6-12	Sensor Sound Suppression Hood – small
Pedestal	Floor pedestal for 24-module rack
DH	Document Holder

Backup Station Accessories

ETC®

Sensor3™ 120V UL Racks

Sensor3 SR Series

SPECIFICATIONS

GENERAL

- Racks available in four sizes:
  - SR3-6 6 modules, 12 dimmers maximum
  - SR3-12 12 modules, 24 dimmers maximum
  - SR3-24 24 modules, 48 dimmers maximum
  - SR3-48 48 modules, 96 dimmers maximum
- Dual density (two dimmers per module), single density and half density dimmer modules available
- Operating temperature: 0-40°C / 32-104°F
  - Dimmer room HVAC systems must at all times maintain the specified ambient temperature at the dimmer rack. Dimming systems operating within 10°F of the upper or lower temperature limits must strictly follow installation and operation guidelines to operate reliably.
- Relative humidity: 10-90% non-condensing
- All racks UL and cUL Listed

MECHANICAL

- Rugged 16-gauge steel construction
- Fine-textured, scratch-resistant, epoxy paint
- SR3-6 and SR3-12 uses wall mount installation
- SR3-24 can be wall or pedestal mounted
- SR3-48 is floor mounted
- Top and bottom conduit access through removable panels (SR3-48) or knockouts (SR3-6, SR3-12, and SR3-24)
- No tools required for module removal or installation
- Keyed module slots prevent insertion of inappropriate module types
- Front access to all wiring and terminations
- Full height locking door
- Electrostatic air filter easily removed from door for periodic cleaning
- High efficiency cooling system with airflow sensor
- High visibility LED status beacon

ELECTRICAL

- SR3-6, SR3-12 and SR3-24 accept:
  - Three phase 120/208 VAC
  - Single phase 120/240 VAC
- SR3-48 accepts:
  - Three phase 120/208 VAC
- Line feed frequencies from 47-63Hz
- Line feed voltage range is 91-139 VAC*
- Load terminals accept up to #4 AWG (25mm^2) wire (see chart)
- Short Circuit Current Rating: 100,000A RMS symmetrical at 120VAC
- Auxiliary equipment racks and custom switchgear/distribution available (call ETC for details)

*Note: Suggested max main transformer tap 135V to allow for line fluxuation

CONTROL ELECTRONICS

- CEM3 Power Control
- Full number pad for fast access to dimmer override and setup
- Graphical backlit display
- Supports Dimmer Doubling™
- Standard diagnostic reporting

OPTIONS

- Advanced Features (AF) dimmer-specific load and diagnostic reporting
- Amp-Trap® fuses to allow feeding individual racks from oversize mains
- Bus kits available
- Vibration reduction kits available for all racks

ADDITIONAL INFORMATION

Compatible Dimmer Modules

SENSOR STANDARD MODULES	
MODEL	**DESCRIPTION**
D15/D20	Dual 15A/20A Dimmer Module – 350µS
D15E/D20E	Dual 15A/20A Dimmer Module – 500µS
D50AF	Single 50A Dimmer Module – 500µS – AF
D100AF*	Half 100A Dimmer Module – 500µS – AF
SENSOR SPECIAL PURPOSE MODULES	
ELV10	Dual 10A Dimmer for electronic low voltage transformers
D20FB	Single 15A/20A dimmer for two wire fluorescent with emergency battery backup
D15F/D20F	Single 15A/20A Fluorescent Dimmer Module
R15/R20	Dual 15A/20A Relay Module
CC15/CC20	Dual 15A/20A Constant Circuit Breaker Module
AFM	Air Flow Module

*Half-density modules use two module slots.

Control Modules

MODEL	DESCRIPTION
CEM3	Power Controller

Load Wiring Lug Capacity

CONNECTION	WIRE SIZE
10A, 15A, 20A, and 50A lugs	4 AWG Max. (25mm^2)
100A lugs	2/0 Max.

Primary Feed Lug Capacity

CONNECTION	WIRE SIZE	FEED RATING
SR3-48	Dual 600 kcmil – 2 AWG	800A*
SR3-24	Dual 350 kcmil – 4 AWG	400A
SR3-12	Dual 250 kcmil – 6 AWG	200A
SR3-6	Single 2/0 – 14 AWG	100A

Sound Pressure Level (dBA)

MODEL	dBA @ 1000Hz (1kHz)**	
	WITHOUT	WITH SSSh**
SR3-48	37.0	30.9
SR3-24	40.2	34.0
SR3-12	41.8	33.8
SR3-6	26.0	21.4

*With addition of an AX48-30 rack and amp traps, feeder sizes can increase up to 2000A max. See Sensor aux bay data sheet for more details.

**dBA values for each Sensor rack measured at one meter. Visit www.etcconnect.com for full spectrum dBA ratings.

**Sensor Sound Supression hood (SSSh).

ETC®

Sensor3™ 120V UL Racks

Sensor3 SR Series

TYPICAL SYSTEM RISER

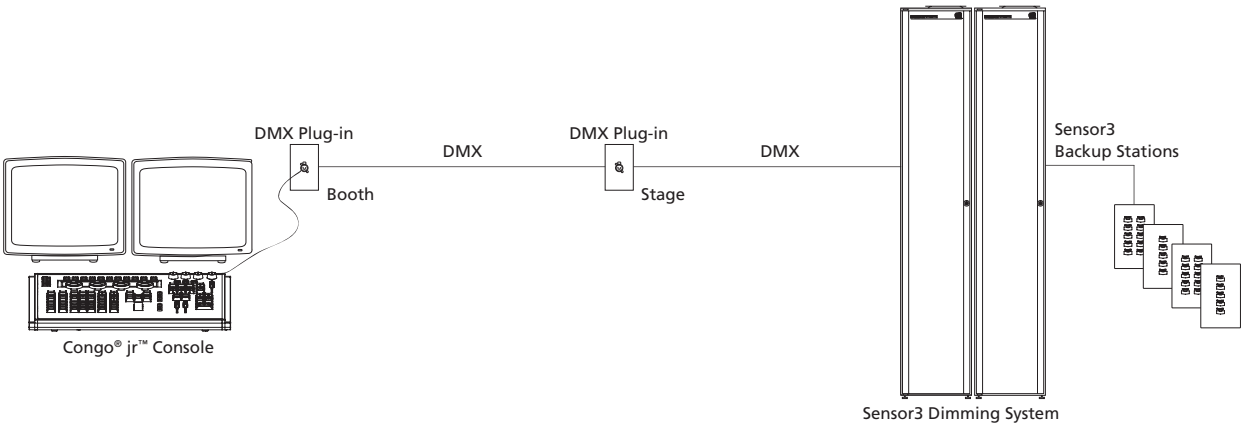

TYPICAL NETWORK RISER

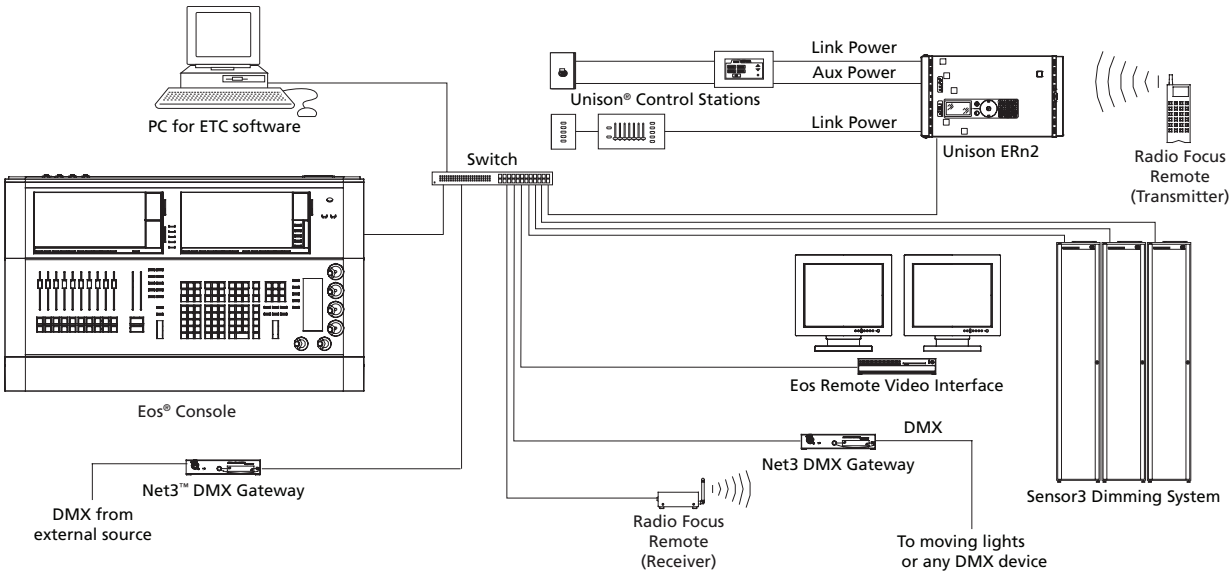

ETC®

Sensor3™ 120V UL Racks

Sensor3 SR Series

PHYSICAL

Empty Dimmer Rack Weights

MODEL	WEIGHT		SHIPPING WEIGHT	
	lbs	kgs	lbs	kgs
SR3-48	188	86	198	90
SR3-48 Door*	31	14	35	16
SR3-24	107	49	115	53
SR3-24 Door*	17	8	20	9
SR3-12	45	21	50	23
SR3-12 Door*	11	5	14	6.5
SR3-6 with Door	36	16	45	21

*Rack doors ship separately.

Installation Rack Dimensions

MODEL	HEIGHT		WIDTH		DEPTH	
	inches	mm	inches	mm	inches	mm
SR3-48	83.1	2110	14.6	370	22.8	580
SR3-24	45.8	1160	14.6	370	16.8	430
SR3-12	25.8	660	14.6	370	13.3	340
SR3-6	16.4	420	14.6	370	13.3	340

Full Dimmer Rack Weights

MODEL	MAX. WEIGHT		TYPICAL WEIGHT	
	lbs	kgs	lbs	kgs
SR3-48	493	224	459	209
SR3-24	261	119	244	111
SR3-12	115	53	105	48
SR3-6	71	33	66	30

*Maximum – D100AF modules (11.7lbs/slot) Typical – D20 modules (5lbs/slot)

Refer to module datasheets to calculate rack weight for other module types.

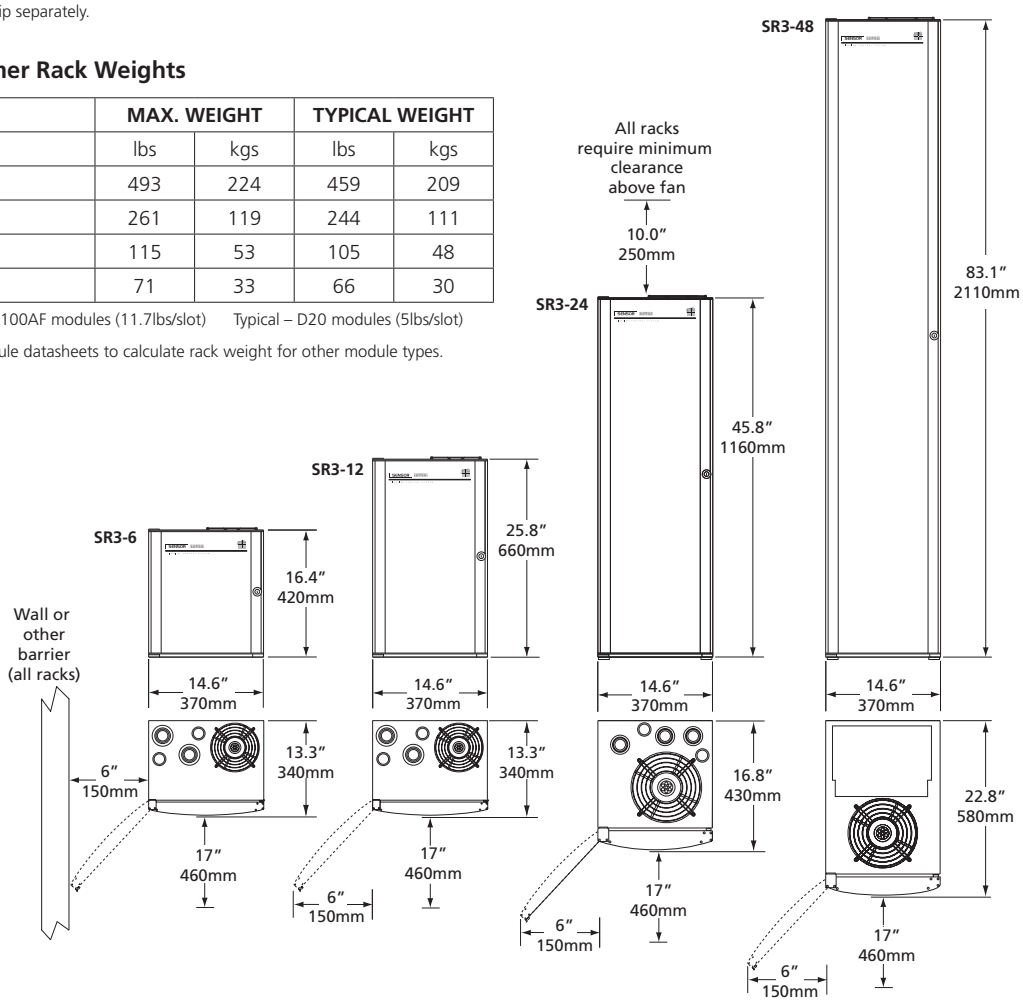

Corporate Headquarters • 3031 Pleasant View Rd, PO Box 620979, Middleton WI 53562 0979 USA • Tel +1 608 831 4116 • Fax +1 608 836 1736
London, UK • Unit 26-28, Victoria Industrial Estate, Victoria Road, London W3 6UU, UK • Tel +44 (0) 20 8896 1000 • Fax +44 (0) 20 8896 2000
Rome, IT • Via Pieve Torina, 48, 00156 Rome, Italy • Tel +39 (06) 32 111 683 • Fax +44 (0) 20 8752 8486
Holzkirchen, DE • Ohmstrasse 3, 83607 Holzkirchen, Germany • Tel +49 (80 24) 47 00-0 • Fax +49 (80 24) 47 00-3 00
Hong Kong • Room 1801, 18/F, Tower 1 Phase 1, Enterprise Square, 9 Sheung Yuet Road, Kowloon Bay, Kowloon, Hong Kong • Tel +852 2799 1220 • Fax +852 2799 9325
Web • www.etcconnect.com • Copyright©2012 ETC. All Rights Reserved. All product information and specifications subject to change. 7141L1002 Rev. D USA 01/12
Sensor® products protected by one or more of the following U.S. Patent Numbers 5,323,088, 5,352,088, 7,233,112, 7,019,469, 6,849,943, and 6,002,563; European Number 0603333T2; German 69203609.

ETC®

CEM3 Power Controller

100V 115/120V 230/240V

ETC Power Control Series

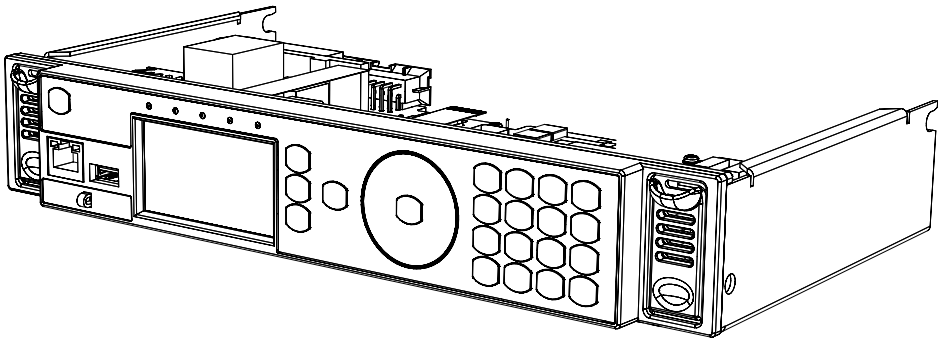

GENERAL INFORMATION

The Sensor®3 Control Electronics Module (CEM3) is ETC's new platform for power control. CEM3 manages priority based Ethernet, DMX and Preset control for ultra smooth 16 bit dimming, fast activation of relays, and instant on support for emergency lighting systems. Energy usage, system status, and quick changes to circuit setup can be accessed at its intuitive face panel or remotely at the lighting console.

APPLICATIONS

- Professional and educational theatre
- Production studios
- Performance halls
- Retail and dining
- Houses of worship
- High density architectural dimming
- Touring and Portable dimming

FEATURES

- **Net3 Uplink** - Connect the Net3 Lighting network using the ethernet jack on the front of the control module
- **USB QuickLoad** - Backup system settings and upgrade software
- **Point of Control Interface** - Easy to read systems display shows the user pertinent system information
- **Live Control Override -** For presets, set level, and dimmer check
- **Local Menu** - Access to set up features and control directly at the control processor
- **Backup Looks** - 64 Presets with programmable fade times and priority allows for take control, pile on, or live control failover sources to insure that your show will never go black!
- **Connect to Console** - System and rack feedback to live control desks is standard (available Summer 2011)
- **Quick Setup Wizard** - Builds a simple system in a single step
- **Advanced Features (AF)** - Adds dimmer-specific reporting
- **ETC Dimmer Doubling™** - Increase your individually controllable fixtures without adding extra circuits (supported only at 60hz)
- **Ride Thru** - Optional accessory which holds up the processor electronics through a power outage for a few seconds
- **Battery Pack** - Optional accessory which holds up the processor electronics through a power outage for many minutes

ORDERING INFORMATION

Control Module

MODEL	DESCRIPTION
CEM3	CEM3 Power Controller

Compatible Systems

MODEL	DESCRIPTION
SENSOR3 INSTALLATION RACKS	
SR3-48/SR3AF-48	Sensor3 48 module installation racks
SR3-24/SR3AF-48	Sensor3 24 module installation racks
SR3-12/SR3AF-12	Sensor3 12 module installation racks
SR3-6/SR3AF-6	Sensor3 6 module installation racks
HSR3/HSR3AF-	Sensor3 230V installation racks
SR3AFN	Sensor3 GFCI installation racks
ESR3AFN	Sensor3 CE installation racks
SENSOR3 TOURING RACKS	
SP3	Sensor3 small frame touring rack
SP3	Sensor3 large frame touring rack
SENSOR+ PORTABLE PACKS	
SP3-2420	Sensor3 12 module portable pack
SP3-1220	Sensor3 6 module portable pack

CEM3 Accessories

MODEL	DESCRIPTION
RK	Retrofit kit for Sensor standard and AF racks

ETC®

CEM3 Controller

ETC Power Control Series

SPECIFICATIONS

GENERAL
- Universal Control Electronics Module
- Direct Ethernet connectivity for dimmer levels, feedback and system control
- UL, cUL LISTED and CE Marked

PHYSICAL
- Formed steel body
- Die cast face panel finished with textured epoxy paint
- Slide-in module installs and removes without tools
- Spring-loaded module release
- Airflow sensor to ensure adequate airflow

ELECTRICAL
- Accepts:
  - Single phase
  - Three phase WYE or Delta
- Universal Voltage range 91-139V and 181-259 VAC*
- Line feed frequencies from 47-53Hz and 57-63Hz
- Automatic frequency variation compensation
- Two configurable DMX512 inputs (2500V opto-isolated)

*Note: Suggested max main transformer tap 135V or 255V to allow for line fluxuation.

CONTROL FEATURES
- Eight-line by 20-character graphical LCD for system configuration, live control, and status display
- Full number pad for quick access to dimmers
- Shortcut buttons for Setup, About, and live control
- Five status LED indicators: Power, Network activity, DMX-A DMX-B, and Panic
- 64 user-programmable presets
- Single Panic circuit with flexible programming (Spring 2011)
- Replacement CEM3 automatically loads rack configuration
- Configuration backups saved on USB or network
- Dimmer outputs regulate to maintain constant power ±1V
- Individual output scale voltage settings for load wiring compensation
- Selectable Firing Modes: Normal (forward phase, Reverse Phase, Dimmer Doubled, Sinewave, and Fluorescent
- Control Modes: Dimmed, Switched, Latch/lock, Always On, and Off
- Selectable Dimmer Output Curves: Linear, Modified Linear, Square, Modified Square, and Sensor 2.0, and five custom curves
- 16-Bit fade resolution (> 30,000-Step Resolution per 1/2 cycle)
- Selectable Data Loss Behavior

FEEDBACK
- All Sensor racks with CEM3 modules include basic system diagnostic reporting
- Standard rack feedback includes: DMX input status, Rack power status, and Rack temperature
- Advanced Features (AF) provides dimmer specific status and load feedback (requires AF dimmer rack and AF dimmer modules)

LOCAL PROGRAMMING

LOCAL LIVE CONTROL
- Set Levels, Preset Activation, and Dimmer Check

STATUS (ABOUT)
- All modules: module type, mode, control source, and module location, overtemp
- AF modules: module removed, breaker trip, recorded and actual load
- Rack: temperature, rack type, Run Hours
- Network: IP address, SubNet mask, Gateway and active link
- Rack Data Ports: status for DMXA and B, and sACN
- About Rack Power: frequency, voltage per phase, and voltage headroom
- About Software: version number

SETUP
- Setup dimmer: Firing Mode, Curve, Scale Voltage and Name
- Patch
- Set rack priority per DMX port
- Data Loss Behavior: Hold last Look, Wait and fade, Play Preset
- Name the rack (using ACN)
- Custom dimmer numbering
- Get Config and save Config to USB

PHYSICAL

CEM3 Dimensions

MODEL	HEIGHT		WIDTH		DEPTH	
	inches	mm	inches	mm	inches	mm
CEM3	2.06	52	11.80	300	7.00	178

CEM3 Weight

MODEL	WEIGHT		SHIPPING WEIGHT	
	lbs	kgs	lbs	kgs
All CEM3	3.5	1.6	6.2	2.8

Maximum BTU Production per Module

MODEL	BTUS	WATTS	EFFICIENCY
All CEM3	<10	<4	N/A

Corporate Headquarters • 3031 Pleasant View Rd, PO Box 620979, Middleton WI 53562 0979 USA • Tel +1 608 831 4116 • Fax +1 608 836 1736
London, UK • Unit 26-28, Victoria Industrial Estate, Victoria Road, London W3 6UU, UK • Tel +44 (0)20 8896 1000 • Fax +44 (0)20 8896 2000
Rome, IT • Via Pieve Torina, 48, 00156 Rome, Italy • Tel +39 (06) 32 111 683 • Fax +44 (0) 20 8752 8486
Holzkirchen, DE • Ohmstrasse 3, 83607 Holzkirchen, Germany • Tel +49 (80 24) 47 00-0 • Fax +49 (80 24) 47 00-3 00
Hong Kong • Room 1801, 18/F, Tower 1 Phase 1, Enterprise Square, 9 Sheung Yuet Road, Kowloon Bay, Kowloon, Hong Kong • Tel +852 2799 1220 • Fax +852 2799 9325
Web • www.etcconnect.com • Copyright©2013 ETC. All Rights Reserved. All product information and specifications subject to change. 7140L1001 Rev. D Printed in USA 11/13

Sensor® products protected by one or more of the following U.S. Patent Numbers 5,323,088, 5,352,088, 7,233,112, 7,019,469, 6,849,943, and 6,002,563; European Number 0603333T2; German 69203609.

ETC® Unison® 100-120V Rack Enclosure

Unison Dimming Series

100V 120V

SMARTLINK.

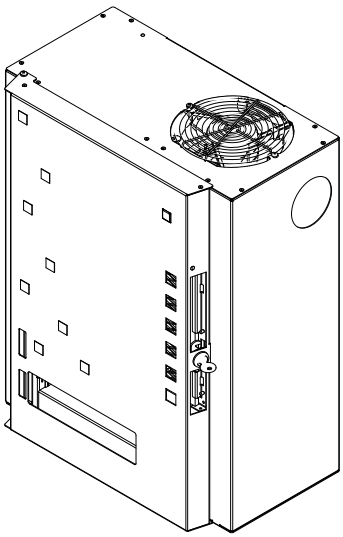

GENERAL INFORMATION

ETC's Unison DRd Series Rack Enclosures are the workhorses behind the scenes, supporting two processor options and a variety of dimming, switching and option modules. DRd Rack Enclosures are trusted for their reliability and versatility.

APPLICATIONS

- Churches
- Hotels
- Convention Centers
- Theatres
- Schools
- Restaurants

FEATURES

- All-On – clearly marked switch allows for all loads to be turned on to full, without the need for a control processor
- HighFault – protection from power spikes and surges with short circuit current ratings from 22,000 amps, up to 100,000 amps
- Regulation – monitoring and adjustment of incoming line voltage with min and max scale voltages
- Bypass – UL924-listed emergency lighting bypass input with load shedding
- Hold Last Look – dimming engine holds the last output during any loss of control
- QuickBoot – dimming engine boot time of less than 4 seconds
- PowerStrip – solid copper bus that easily converts form 1-phase to 3-phase without additional parts
- HiRes Dimming – support for 16 bit DMX and over 65,000 steps of dimming
- Electronic Low Voltage Dimming – reverse phase dimming control for electronic low-voltage transformers when used with the ELV module

ORDERING INFORMATION

100-120 Volt – DRd Rack Enclosures

MODEL	DESCRIPTION
DRd6-12-120	6 module rack enclosure (12 circuits)
DRd12-24-120	12 module rack enclosure (24 circuits)
DRd12-48-120*	(2) 12 module rack enclosures (48 circuits)

*In 48 channel configurations, (2) 12 module racks are cross-bussed using AX series main lug or main breaker enclosures.

100-120 Volt – Auxiliary Enclosures

MODEL	DESCRIPTION
AX6-MCB-1-150	Auxiliary rack with 150A Main Breaker for DRd6 -1ø, 3W
AX6-MCB-3-100	Auxiliary Rack with 100A Main Breaker for DRd6 - 3ø, 4W
AX12-MCB-1-300	Auxiliary Rack with 300A Main Breaker for DRd12 - 1ø, 4W
AX12-MCB-3-200	Auxiliary Rack with 200A Main Breaker for DRd12 - 3ø, 4W
AX12X-MCB-1-400	Auxiliary Rack with 400A Main Breaker for (2) DRd12 - 1ø, 3W
AX12X-MCB-3-400	Auxiliary Rack with 400A Main Breaker for (2) DR12 - 3ø, 4W
AX12X-ML-1-600	Auxiliary Rack with Main Lugs for (2) DR12 - 1ø, 3W
AX12X-ML-3-400	Auxiliary Rack with Main Lugs for (2) DR12 - 3ø, 4W

DRd Options and Accessories

MODEL	DESCRIPTION
DRd-FLO	DRd 0-10V LED/ Fluorescent Control Option
DRd-DALI	DRd DALI Control Option
DRd-PED	DRd Floor Mount Pedestal
U-RTO	Unison RideThru Option
U-BPO	Unison BatteryPack Option

ETC®

ETC® Unison® 100-120V Rack Enclosure

Unison Dimming Series

SPECIFICATIONS

GENERAL
- DRd rack enclosures available in two sizes. DRd6 with support for 6 modules and up to 12 circuits and DRd12 with up to 12 modules and 24 circuits.
- Full 8 year Warranty

FUNCTIONAL
- High density dimming for incandescent, fluorescent, neon, cold cathode, electronic and magnetic low voltage transformer load types
- Ability to cross bus and control two rack enclosures using one control processor
- Supports ETC Dimmer Doubling
- 16 bit DMX input
- Designed for reliable continuous operation

MECHANICAL
- Welded 18-gauge formed steel construction
- Surface or floor stand mount
- Hinged, lockable full-height door with electrostatic air filter
- Fine-textured, scratch resistant, epoxy paint
- Integral low voltage fan
- Modular control electronics

ELECTRICAL
- 100-120 Volt, 3 phase systems
  - Field configurable for single-phase operation with no additional parts
  - Available in 230 Volt CE, and 240 or 277 Volt UL configurations
- Voltage tolerance ± 10%
- Operating frequency: 50-60Hz.
- DRd6/ DRd12 Rack Enclosure fault current protection:
  - 22,000A Short Circuit Current Rating (SCCR)
  - 100,000A SCCR when installed using AX Auxiliary Rack with Main Breaker
- Main lugs accept maximum 350 MCM wire
- Load terminals accept maximum #6 AWG wire
- AX Racks equipped with breakers sized for maximum load capacity
  - Lower rated trip plug options available
- UL and cUL LISTED

THERMAL
- Ambient room temperature: 0-40°C / 32-104°F
- Ambient humidity: 10-90% non-condensing

ACCESSORIES AND OPTIONS

CONTROL PROCESSORS
- SmartLink® Architectural Control Processor (S-ACP)
- Paradigm® Architectural Control Processor (P-ACP)

STATION POWER OPTIONS
- SmartLink Station Power Module (S-SPM)
  - Provides Echelon® LinkPower for up to 16 SmartLink stations
  - Allows for up to 1640 feet (500 meters) of station bus wiring
- Paradigm Station Power Module (P-SPM)
  - Provides Echelon LinkPower for up to 32 Unison stations
  - Provides 24V auxiliary power for interface and touchscreen stations
  - Allows for up to 1640 feet (500 meters) of station bus wiring

UNISON MODULES

MODEL	DESCRIPTION
D15	Dual 1.8KW (120V) Dimmer Module
D15E	Dual 1.8KW (120V) High Rise-time Dimmer Module
D15F	Single 1.8KW (120V) 3-wire Dimmer Module
R15	Dual 1.8KW (120V) Relay Module
CC15	Dual 1.8KW (120V) Constant Current Module
D20	Dual 2.4KW (120V) Dimmer Module
D20E	Dual 2.4KW (120V) High Rise-time Dimmer Module
D20F	Single 2.4KW (120V) 3-wire Dimmer Module
R20	Dual 2.4KW (120V) Relay Module
CC20	Dual 2.4KW (120V) Constant Current Module
ELV10	Dual 1.2KW (120V) Electronic Low-Voltage Module

ACCESSORIES
- Unison RideThru Option (URTO)
  - Short term power back-up of control electronics for at least 10 seconds
  - Automatically engages when power is lost
  - Recharges during normal power operation
- Unison Battery Pack Option (UBPO)
  - Long term power back-up of control electronics for at least 90 minutes
  - Automatically engages when power is lost
  - Recharges during normal power operation
- 0-10V (4-wire) control option (DRd-FLO)*
  - 0-10 Volt (sink) driver and ballast control
  - Up to 24 outputs
  - 400mA per channel
- DALI Ballast option (DRd-DALI)*
  - Support for 24 loops of DALI control in broadcast mode
  - Up to 64 ballasts per output
  - External DALI power supply required (by others)
- Unison DRd Pedestal (DRd-PED)
  - Floor-mount pedestal for Unison DRd dimming enclosures

*Option module required, either (1) DRd-DALI or (1) DRd-FLO may be used in each DRd enclosure

ETC® Unison® 100-120V Rack Enclosure

Unison Dimming Series

TYPICAL SYSTEM RISER – SMARTLINK CONTROL

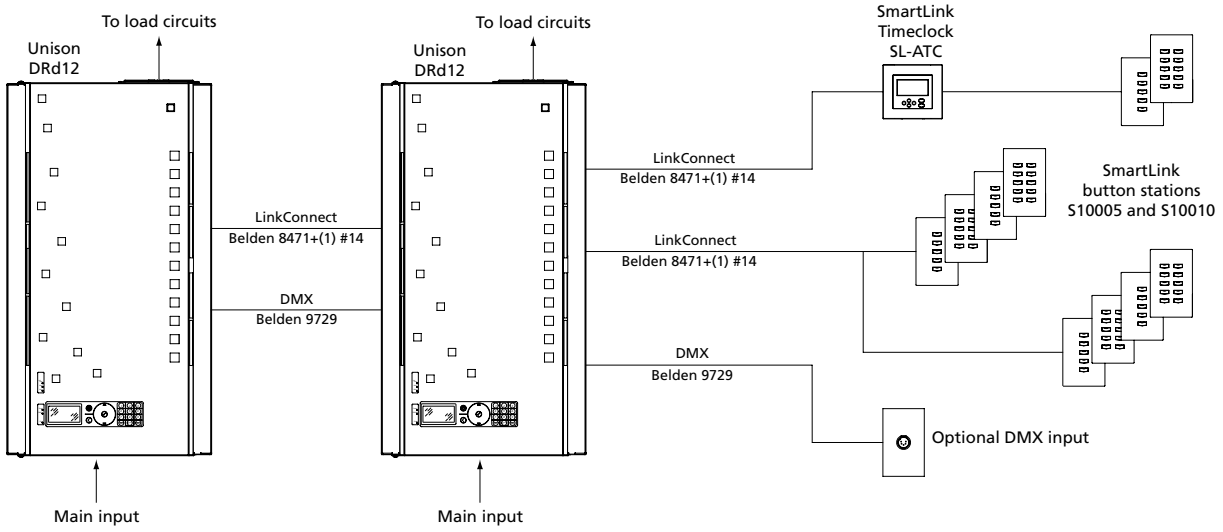

TYPICAL SYSTEM RISER – PARADIGM CONTROL

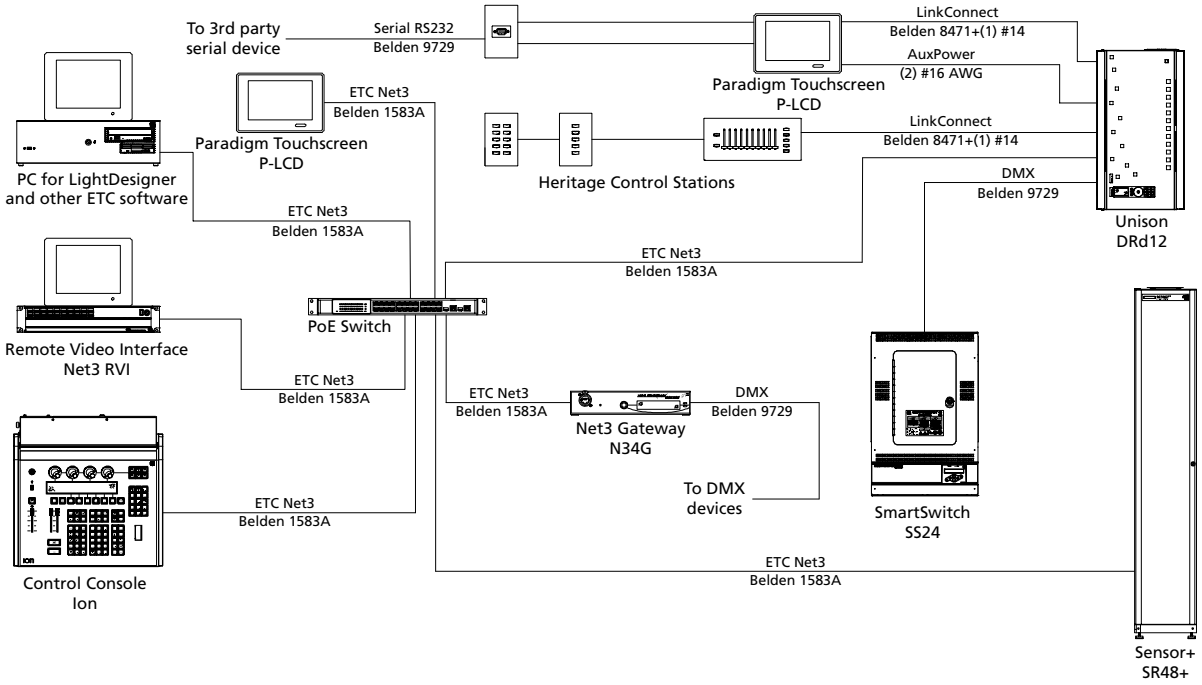

ETC® Unison® 100-120V Rack Enclosure

Unison Dimming Series

PHYSICAL

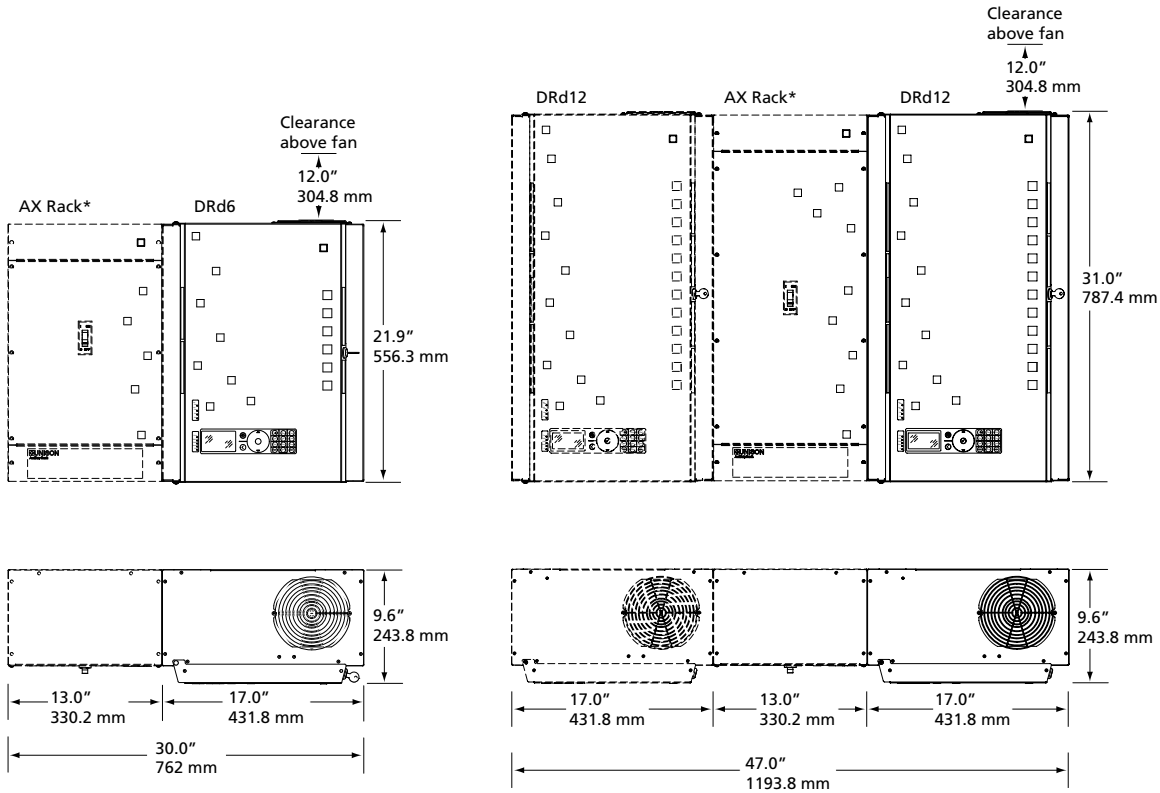

*Optional AX Shown

Product Dimensions*

MODEL	HEIGHT		WIDTH		DEPTH	
	inches	mm	inches	mm	inches	mm
DRd6-12-120	21.9	557	17.0	432	9.60	244
DRd12-24-120	31.0	787	17.0	432	9.60	244
AX6	21.9	557	13.0	330	8.0	203
AX12	31.0	787	13.0	330	8.0	203
AX12X	31.0	787	13.0	330	8.0	203

Product Weights*

MODEL	WEIGHT		SHIPPING WEIGHT	
	lbs	kgs	lbs	kgs
DRd6-12-120	38	17.15	42	19.05
DRd12-24-120	51	23.13	55	24.95
AX6-MCB	28	12.52	35	15.87
AX12-MCB	33	14.97	40	18.14
AX12X-ML	33	14.97	40	18.14
AX12X-MCB	35	15.88	42	19.05

*Weights and dimensions typical

Corporate Headquarters • 3031 Pleasant View Rd, PO Box 620979, Middleton WI 53562 0979 USA • Tel +1 608 831 4116 • Fax +1 608 836 1736
London, UK • Unit 26-28, Victoria Industrial Estate, Victoria Road, London W3 6UU, UK • Tel +44 (0)20 8896 1000 • Fax +44 (0)20 8896 2000
Rome, IT • Via Pieve Torina, 48, 00156 Rome, Italy • Tel +39 (06) 32 111 683 • Fax +44 (0) 20 8752 8486
Holzkirchen, DE • Ohmstrasse 3, 83607 Holzkirchen, Germany • Tel +49 (80 24) 47 00-0 • Fax +49 (80 24) 47 00-3 00
Hong Kong • Room 1801, 18/F, Tower 1 Phase 1, Enterprise Square, 9 Sheung Yuet Road, Kowloon Bay, Kowloon, Hong Kong • Tel +852 2799 1220 • Fax +852 2799 9325
Web • www.etcconnect.com • Copyright©2013 ETC. All Rights Reserved. All product information and specifications subject to change. 7183L1013 Rev. D Printed in USA 06/13

Unison® products protected by one or more of the following U.S. Patenten Numbers 5,323,088, 5,352,958 and 6,849,943; European Pateten Number 0603333; German Patent Number 69203609; US and International patents pending

ETC®

Emergency Bypass Detection Kit

Emergency Series

LISTED LISTED **100V 120V 240V 277V**

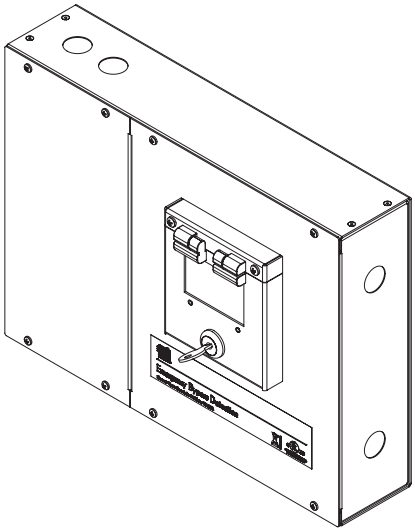

GENERAL INFORMATION

The Emergency Bypass Detection Kit monitors a normal power feed in single or three phase systems, and generates a maintained contact closure upon loss of power to trigger the UL924 listed Emergency Lighting Bypass Operation in ETC Dimming and Switching products.

APPLICATIONS

- Churches
- Hotels
- Convention Centers
- Theatres
- Schools
- Restaurants

FEATURES

- Self-contained unit provides sensing for power loss and trigger
- Compatible with Single or Three-phase power systems
- Compatible with 100V-277V power systems
- Fully automatic sensing
- Provides up to three independent outputs configurable for normally-open or normally-closed operation
- Rugged metal enclosure with integrated breaker for over current protection
- EBDK-TAP allows easy integration with the Unison DRd enclosure eliminating the need for an external breaker when power is sensed from a normal powered DRd enclosure
- EBDK-SWITCH provides a manual restore switch requiring user intervention to restore normal lighting operation

GENERAL

- UL and cUL Listed

ORDERING INFORMATION

Emergency Bypass Detection Kit

MODEL	DESCRIPTION
EBDK	Emergency Bypass Detection Kit

Emergency Bypass Detection Accessories

MODEL	DESCRIPTION
EBDK-TAP	Unison DRd Emergency Sense Feed Tap Kit
EBDK-SWITCH	Emergency Bypass Restore Switch

EBDK ACCESSORIES

EMERGENCY BYPASS RESTORE SWITCH

- Easy to identify station labeled 'Lighting System Restore'
- Prevents the system from returning to normal lighting while egress is occurring
- Single-button operation with red backlit switch
- Switch is illuminated during emergency lighting bypass operation
- Simple wiring using two #16 AWG wires
- Up to two restore switches may be connected to a single EBDK

UNISON DRD TAP KIT

- Designed for use in all Unison DRd Enclosures
- Accommodates sensing of normal power from a Unison DRd Enclosure
- Includes wire leads and fuse block for over-current protection
- Eliminates the need for an external circuit breaker

ETC® Emergency Bypass Detection Kit

Emergency Series

SPECIFICATIONS

FUNCTIONAL

- Compatible with single or three-phase lighting systems from 100V to 277V
- Provides dry contact closure output to ETC dimming and switching products for UL924 Listed emergency lighting applications
- Automatic sensing of normal power loss
- Supports the Emergency Bypass Detection Kit Restore Switch requiring manual return to normal lighting

MECHANICAL

- Enclosure and cover are constructed of 16 gauge (.08) steel and are finished in a black fine-texture powder coat paint
- Designed for Wall-mount applications
- Removable Cover
- Internal voltage barrier provides separate wiring compartments between Power and control wiring
- Hinged locking door covers integrated breaker to prevent accidental tripping

ELECTRICAL

- Supports input voltage from 100V up to 277V
- Phase Loss Detection Circuitry provides a factory set delay of 0.5 seconds to prevent nuisance tripping
- Integrated Circuit Breaker for over-current protection and simulation of power loss
- Isolated outputs for connection to multiple ETC products including Sensor®+, Unison® DRd, and Smart Solutions™ SmartPack and SmartSwitch
- Up to 8 dimming or switching products may be connected to each output
- All wiring terminations are made using provided terminals
- Input and output terminals accept #8AWG to #22AWG wiring
- Simple wiring for single or three-phase systems
- Normally-closed input for fire alarm systems provided
- Optional manual Lighting Restore Switch (EBDK-SWITCH) available
- Optional tap kit (EBDK-TAP) available

THERMAL

- Ambient room temperature: 0-40°C / 32-104°F
- Ambient humidity: 10-90% non-condensing

EBDK – SWITCH WIRING

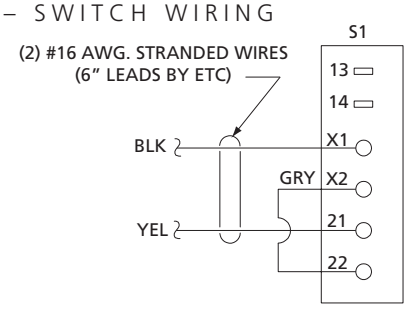

PHYSICAL

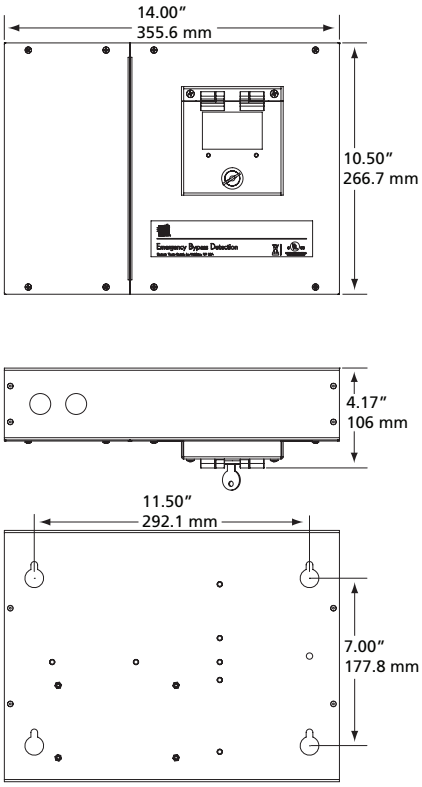

Product Dimensions

MODEL	HEIGHT		WIDTH		DEPTH	
	inches	mm	inches	mm	inches	mm
EBDK	10.5	267	14.0	356	4.2	107
EBDK-TAP	1.25	31.8	2.5	63.5	2.25	57.2
EBDK-SWITCH	4.5	114	3.0	76	3.0	76

Product Weights*

MODEL	WEIGHT		SHIPPING WEIGHT	
	lbs	kgs	lbs	kgs
EBDK	10.6	4.8	13.2	6.0
EBDK-TAP	1.3	0.6	1.9	0.9
EBDK-SWITCH	0.1	0.05	0.4	0.18

*Weights and dimensions typical

Corporate Headquarters • 3031 Pleasant View Rd, PO Box 620979, Middleton WI 53562 0979 USA • Tel +1 608 831 4116 • Fax +1 608 836 1736
London, UK • Unit 26-28, Victoria Industrial Estate, Victoria Road, London W3 6UU, UK • Tel +44 (0)20 8896 1000 • Fax +44 (0)20 8896 2000
Rome, IT • Via Pieve Torina, 48, 00156 Rome, Italy • Tel +39 (06) 32 111 683 • Fax +44 (0) 20 8752 8486
Holzkirchen, DE • Ohmstrasse 3, 83607 Holzkirchen, Germany • Tel +49 (80 24) 47 00-0 • Fax +49 (80 24) 47 00-3 00
Hong Kong • Room 1801, 18/F, Tower 1 Phase 1, Enterprise Square, 9 Sheung Yuet Road, Kowloon Bay, Kowloon, Hong Kong • Tel +852 2799 1220 • Fax +852 2799 9325
Web • www.etcconnect.com • Copyright©2012 ETC. All Rights Reserved. All product information and specifications subject to change. 7180L1022 Rev. D USA 02/12

Pathway® Connectivity Solutions

Job Name:	Catalog #:
Date:	Notes:

EDIN DEMULTIPLEXER (DMX TO ANALOG INTERFACE)

#1004

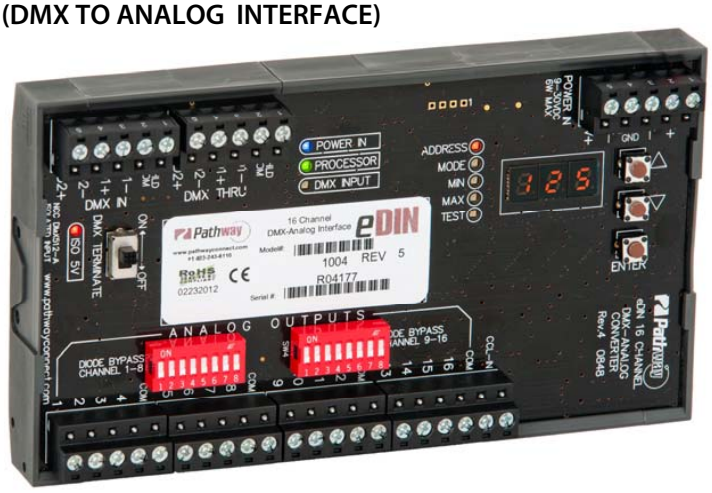

PRODUCT OVERVIEW

The eDIN #1004 converts DMX512 to 16 channels of analog DC output voltage. Diode shunts allow user-selection between current sourcing applications—typically for theatrical dimmers—or current-sinking control—typically for LED fixture driver s or Mark VII electronic fluorescent ballast control. A non-dim mode supports solid-state relay control.

FEATURES

- DMX512 start address and operating mode may be set from front panel interface or remotely using E1.20 RDM
- Indicator LEDs for power, processor, and DMX input status
- Standard DC output modes of 0-10V, 0-15V, 0-2.5V, or 0-5V
- Custom mode allows user-set minimum and maximum DC output up to 16V
- EFBC/LED Driver mode allows single DMX channel control of mains voltage (via SSR) and 0-10V dimming
- Maximum current rating per output of 10mA (sourcing) or 30mA (sinking)
- CCL "Panic Input" drives all outputs to full
- Pluggable terminal block connections accept solid or stranded wire between #26 and #16 AWG
- One DMX512-A/RDM data input connection
- One passive DMX512-A data through connection
- Data and power easily daisy-chained between modules
- Termination switch
- Firmware field-upgradable using RDM (requires Pathway Pathport node and RDM utility program)

SPECIFICATIONS

- 1500V opto-isolation between input and output ports
- 250V fault protection on input and output ports
- Input operating voltage: 9-30 VDC
- 6W power consumption
- Operating conditions: -10°-50°C; 10-90% relative humidity, non-condensing

STANDARDS COMPLIANCE

- ANSI E1.11 DMX512-A(2008)/USITT DMX512(1990)
- ANSI E1.20 RDM(2010) - Remote Device Management
- ANSI E1.3 0-10V Analog Control (with diodes shunts on)
- ANSI C82.11 Fluorescent Ballast Control (diode shunts off)
- CE/FCC
- RoHS 2002/95/EC
- Class 2 Low Voltage

WEIGHTS AND DIMENSIONS

- 0.70 lbs (0.316 kg)
- 3.6"W x 6.25"L x 1.5"H (91mm x 160mm x 38mm)

INCLUDED FURNISHINGS

- DIN tray (housing) with end caps
- 12" (300mm) x 35mm DIN rail
- Installation/Operations manual

© 2013 Acuity Brands Lighting Canada Inc. All Rights Reserved Form #0610-0100-1004

Pathway® Connectivity Solutions

eDIN #1004 Demultiplexer Interface

OPERATING MODES

- **Mode 1 : 0-10VDC Output**
- **Mode 2 : 0-5VDC Output**
- **Mode 3 : 0-15VDC Output**
- **Mode 4 : 0-2.5VDC Output**
- **Mode 5 : Custom Output:** The user may set both a minimum output voltage and a maximum output voltage. Valid DC voltage output range is 0VDC to 16VDC. Values are set as an 8-bit number (0-255). Valid minimum levels are between 0 and 254. Valid maximum levels are between 1 and 255. For example, a value of 158 is equal to an output of 10V. Custom values are not maintained in other operating modes, and do not apply to modes 6, 7 and 8.
- **Mode 6 : Electronic Fluorescent Ballast/LED Driver Control—10% Threshold:** Outputs are paired (1 and 9, 2 and 10, etc.) for unified control of up to eight circuits of LED fixture drivers or Mark VII-type fluorescent ballast controllers. A single DMX channel controls the 0-10V of the lower output, while causing the higher output to provide on/off control of a solid state relay as the DMX value increases or decreases through the threshold. A 12VDC power supply is required.
- **Mode 7 : Non-Dim :** Provides on/off control of solid state relays. At a DMX value of 0%, an output will produce 10V. When the DMX value crosses 50%, the output voltage drops to 0V. Blocking diodes must be shunted (switches in the off position). A 12VDC power supply is required.
- **Mode 8 Electronic fluorescent Ballast/LED Driver Control—1% Threshold:** Outputs are paired (1 and 9, 2 and 10, etc.) for unified control of up to eight circuits of LED fixture drivers or Mark VII-type fluorescent ballast controllers. A single DMX channel controls the 0-10V of the lower output, while causing the higher output to provide on/off control of a solid state relay as the DMX value increases or decreases through the threshold. A 12VDC power supply is required.

APPLICATION RISER

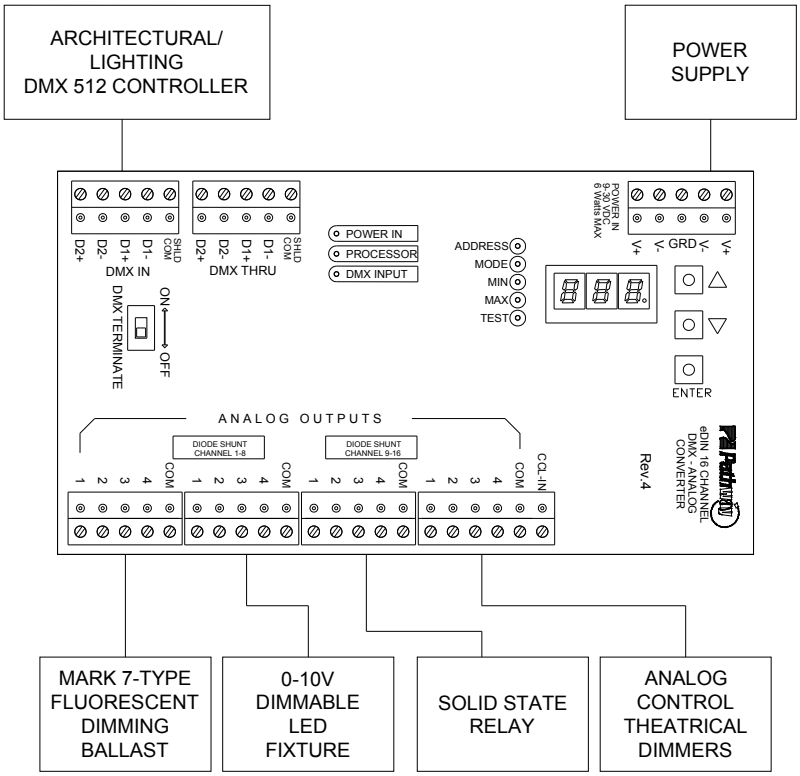

© 2013 Acuity Brands Lighting Canada Inc. All Rights Reserved Form #0610-0100-1004

Pathway® Connectivity Solutions

eDIN #1004 Demultiplexer Interface

ELECTRONIC FLUORESCENT BALLAST CONTRL/LED DRIVER WIRING RISER

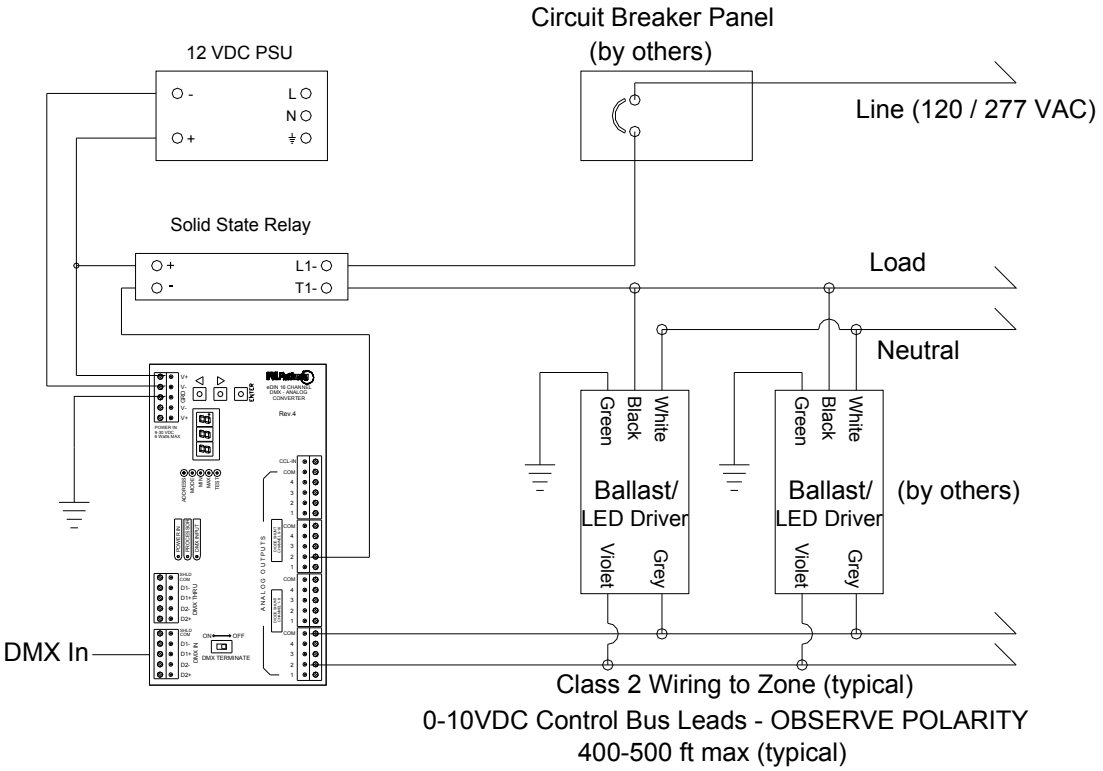

DMX512/RDM PIN OUT:

XLR PIN #	PURPOSE
1	Shield
2	Data - (complement)
3	Data + (true)
4	Data - (pair 2 complement)
5	Data + (pair 2 true)

ORDERING INFORMATION

PART #	DESCRIPTION
1004	eDIN Demultiplexer, 16 Channel
ACCESSORIES	
1001-30	24VDC - 30W DIN-mountable Power Supply
1103	Rack-mount Panel Kit (2RU) wih two 16.5" (420mm) sections of DIN rail
1105	Small eDIN Enclosure (NEMA1) with 9.5" (240mm) of vertical DIN rail
1106	Large eDIN Enclosure (NEMA1) with 19.5" (495mm) of vertical DIN rail
1107	Large eDIN Enclosure (NEMA1) with three rows of 9.5" (240mm) horizontal DIN rail
4000	eDIN Enclosure Assembly Service

#103 - 1439 17th Ave SE Calgary AB Canada T2G 1J9 Phone + 1 403 243 8110 orders@pathwayconnect.com www.pathwayconnect.com
© 2013 Acuity Brands Lighting Canada Inc. All Rights Reserved Form #0610-0100-1004

CONTROL SYSTEM SPECIFICATIONS

1. THE CONTROL SYSTEM SHALL BE "PARADIGM" BY ELECTRONIC THEATER CONTROLS OR APPROVED EQUAL.
2. LOCKING COVERS SHALL BE PROVIDED ON ALL LCD CONTROL PANEL AND BUTTON STATIONS.
3. CUSTOM CONFIGURATION OF LCD TOUCH SCREENS TO BE FURNISHED BY CONTROL SYSTEM SUPPLIER:
   - 3.1. CONTROL SYSTEM SUPPLIER TO PROVIDE A HARD COPY AND/OR DISK COPY OF SYSTEM SOFTWARE AND PROJECT SPECIFIC CONFIGURATION FOR REVIEW BY FOCUS LIGHTING AT LEAST (4) WEEKS PRIOR TO ONSITE TURN ON. THE INITIAL COPY OF SOFTWARE AND CONFIGURATION SHALL INCORPORATE LIGHTING CONSULTANT'S CHANNEL/LOAD SCHEDULE FOR THAT SPECIFIC PROJECT. CONTROL SYSTEM SUPPLIER IS RESPONSIBLE FOR COORDINATION WITH FINAL CONSTRUCTION DOCUMENTS, INCLUDING REVISIONS AND UPDATES. THE REVIEWED AND COORDINATED CONFIGURATION SHALL BE DELIVERED WITH THE LCD TOUCH SCREEN.
   - 3.2. CONTROL SYSTEM SUPPLIER TO ALLOW TIME AND LABOR WITHIN CONSTRUCTION SCHEDULE FOR CUSTOMIZATION OF SYSTEM CONFIGURATION TO OWNER AND LIGHTING CONSULTANT'S SPECIFICATIONS AFTER REVIEW. (I.E. LOAD SCHEDULE, OPERATIONAL NEEDS AND ON-SITE REVISIONS)
   - 3.3. IF MORE THAN ONE LCD/TOUCHSCREEN STATION IS INSTALLED, CONTROL SYSTEM SUPPLIER TO FURNISH EACH STATION WITH ITS OWN SEPARATE CONFIGURATION. THIS CONFIGURATION IS TO BE APPROPRIATE TO ITS FUNCTION AND LOCATION.
   - 3.4. THE LCD SHALL USE "REAL" NAMES FOR ALL LOADS AND ROOMS - NOT CHANNEL OR ROOM NUMBERS.
     - 3.4.1. USE LABELS SUCH AS "SCONCES", "DOWNLIGHTS", "PENDANTS"
   - 3.5. CONTACT FOCUS LIGHTING FOR SOFTWARE CONFIGURATION EXAMPLES.

WALL BOX DIMMER, SWITCH, AND RECEPTACLE SPECIFICATIONS

1. WALL BOX DIMMERS SHALL BE LUTRON "DIVA," TO BE SUPPLIED BY CONTROL SYSTEM SUPPLIER.
2. STANDARD SWITCHES AND RECEPTACLES SHALL BE LEVITON "DECORA" STYLE, TO BE SUPPLIED BY ELECTRICAL CONTRACTOR.
3. SUBMIT CUT SHEETS OF PROPOSED SWITCHES AND RECEPTACLES TO ARCHITECT AND LIGHTING CONSULTANT FOR APPROVAL OF STYLE AND COLOR PRIOR TO ORDERING.
4. DIMMER SUPPLIER TO COORDINATE REQUIRED DIMMER TYPES AND INTERFACES IF REQUIRED WITH CURRENT LIGHTING LOAD SCHEDULE AND FIXTURE SUBMITTALS.
5. REFER TO LIGHTING AND ENGINEERING PLANS FOR QUANTITIES OF DEVICES.
6. IN CASES WHERE EMERGENCY LIGHTING IS CONTROLLED ON A LOCAL WALL BOX DIIMMER OR SWITCH, AN EMERGENCY RELAY (EX. BODINE GTD-20A) SHALL BE LOCATED BETWEEN THE WALL BOX CONTROL AND EMERGENCY FIXTURES. CONFIRM EMERGENCY RELAY SPECIFICATION WITH ELECTRICAL ENGINEER.

PRESET PROGRAMMING CONTROL SYSTEM INTENT

REFER TO LIGHTING COVER SHEET FOR ADDITIONAL INFORMATION.

1. LIGHTING PRESET SCENES:
   - 1.1. THE CONTROL SYSTEM SHALL BE ABLE TO RECALL THE FOLLOWING PRESET SCENES (BY AREA):
     - 1.1.1. DAY
     - 1.1.2. SUNSET
     - 1.1.3. NIGHT
     - 1.1.4. CLEAN UP
     - 1.1.5. OFF
   - 1.2. THE CONTROL SYSTEM SUPPLIER SHALL RECORD THE SCENES ON-SITE, FOLLOWING THE LIGHTING AIM AND ADJUST, AT THE DIRECTION OF THE OWNER, DESIGN ARCHITECT, AND FOCUS LIGHTING.
   - 1.3. THE CONTROL SYSTEM SUPPLIER SHALL CONFIRM FINAL SCENE NAMES WITH THE OWNER PRIOR TO ORDERING ENGRAVED BUTTONS.
   - 1.4. PRESET SCENES MAY BE RECALLED VIA LCD SCREEN, BUTTON STATION, AND/OR ASTRONOMIC TIME CLOCK PROGRAMMING. EXACT METHOD TO BE CONFIRMED WITH OWNER.
2. LCD SCREEN:
   - 2.1. THE LCD SCREEN SHALL BE ABLE TO RECALL THE PRESET SCENES DESCRIBED ABOVE.
   - 2.2. THE LCD SCREEN SHALL ALLOW FOR LEVEL ADJUSTMENT OF EACH INDIVIDUAL ZONE AS SHOWN ON THE LIGHTING LOAD SCHEDULE. THE LEVEL ADJUSTMENTS SHALL NOT AUTOMATICALLY RECORD.
   - 2.3. THE LCD SCREEN SHALL HAVE A "LOCK-OUT" SCREEN WITH A PASSCODE (TO BE CONFIRMED WITH THE OWNER AND LIGHTING DESIGNER). ONCE ENTERED, THE PASSCODE WILL ALLOW FOR PERMANENTLY RE-RECORDING SCENES.
   - 2.4. EACH LCD SHALL HAVE ITS OWN UNIQUE CONFIGURATION.
3. BUTTON STATIONS:
   - 3.1. THE BUTTON STATION(S) SHALL BE ABLE TO RECALL THE PRESET SCENES DESCRIBED ABOVE.
4. PROGRAMMING PORTS:
   - 4.1. LIGHTING PROGRAMMING PORTS SHALL ALLOW FOR CONNECTING A LAPTOP TO THE LIGHTING CONTROL NETWORK FOR PROGRAMMING PURPOSES.
5. TEMPORARY PROGRAMMING LAPTOP:
   - 5.1. A LAPTOP SHALL BE PROVIDED FOR PROGRAMMING PURPOSES ONLY.
   - 5.2. THE LAPTOP SHALL HAVE ALL NECESSARY SOFTWARE FOR PROGRAMMING CONTROL SYSTEM.

CONTROL SYSTEM NOTES

1. ALL WIRES TO BE FURNISHED AND INSTALLED BY ELECTRICAL CONTRACTOR.
2. ALL WIRES TO BE APPROPRIATELY LABELED ON BOTH ENDS.
3. ELECTRICAL CONTRACTOR TO TERMINATE AND TEST ALL CABLES FOR CROSSED PAIRS, SHORTS, CONTINUITY, ETC.
4. ELECTRICAL CONTRACTOR TO FURNISH AND INSTALL RACO 690 (OR EQUAL) BACKBOXES FOR BUTTON STATIONS AND PROGRAMMING PORTS.
5. ELECTRICAL CONTRACTOR TO FURNISH AND INSTALL ALL RECEPTACLES AS SHOWN ON RISER DIAGRAM.
6. ETC NET3 (CAT5e) RUNS MAY NOT EXCEED 100M (300FT.). IF LONGER RUNS ARE NEEDED, THE ELECTRICAL CONTRACTOR SHALL FURNISH AND INSTALL ADDITIONAL SWITCHES AS REQUIRED.
7. ETC NET3 (CAT5e) RUNS REQUIRE INDIVIDUAL HOMERUNS (STAR TOPOLOGY).
8. ALL LIGHTING CONTROL PROTOCOL WIRES (INCLUDING CAT5e, CAT6, CABLES TRANSMITTING DMX, ETC.) MUST EITHER BE RUN IN CONDUIT OR USE FULLY SHIELDED TWISTED PAIR (FSTP) CABLES IN ORDER TO PREVENT INTERFERENCE AND CORRUPTION OF DATA TRANSMISSION.
9. (1) LINK CONNECT STATION POWER MODULE MAY POWER UP TO (32) STATIONS (1,640FT. OF WIRE MAX.). IF LONGER RUNS ARE NEEDED, THE CONTROL SYSTEM SUPPLIER SHALL FURNISH AND ELECTRICAL CONTRACTOR SHALL INSTALL LINKCONNECT REPEATER MODULES AS NEEDED.
10. LINK CONNECT IS A TOPOLOGY FREE SYSTEM (DAISY CHAINING OR STAR PATTERN IS ACCEPTABLE).

NOT FOR CONSTRUCTION

LIGHTING RISER DIAGRAM | SCALE: NA

FOCUS LIGHTING
ARCHITECTURAL LIGHTING DESIGN
FOCUS LIGHTING
221 WEST 116TH STREET NEW YORK, NY
PHONE: +1 212-865-1565 FAX: +1 212-865-4217 CONTACT: KELLYH@FOCUSLIGHTING.COM

PROJECT TITLE: MANHATTAN WEST

PROJECT ADDRESS: MANHATTAN WEST, WEST 31ST STREET & DYER AVENUE, NEW YORK, N.Y. 10001

NO	ISSUE	DATE
	100% SD DOCUMENTS	18 APR 2014
	100% DD - UNITS	24 JUN 2014
	100% DD - UNITS & AMENITIES	09 JUL 2014
	100% CD - UNITS	31 JUL 2014
	AMENITIES UPDATE	05 SEP 2014
	BULLETIN 1	10 OCT 2014
	BULLETIN 2	23 OCT 2014

PRINT DATE: 05 SEPTEMBER 2014

SHEET TITLE: LIGHTING RISER DIAGRAM

DRAWN BY/CHECKED BY: BB/KH

SHEET NO: LD 500

DEPT OF BLDGS121185760 Job Number
ES936352726 Scan Code

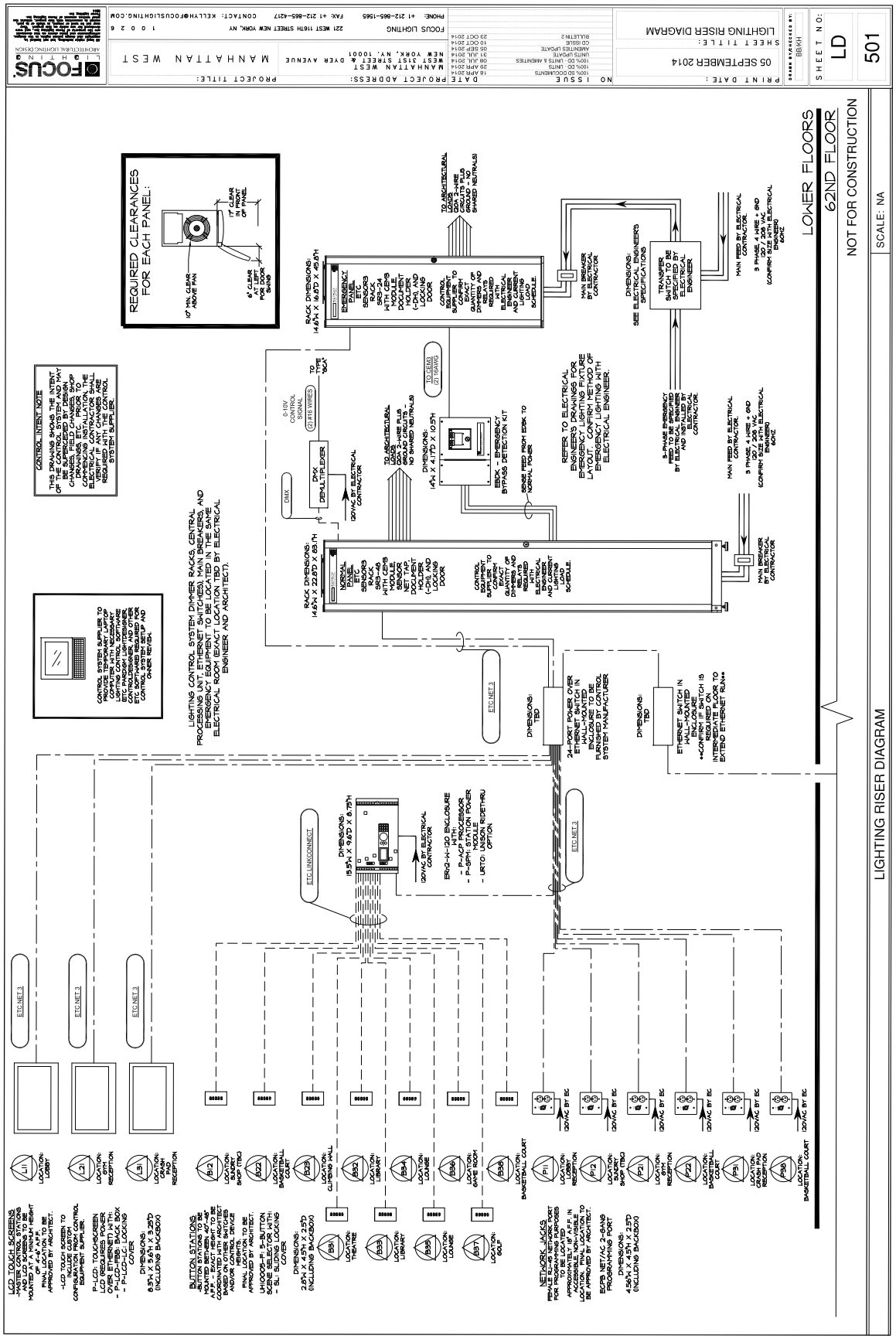
FOCUS LIGHTING
ARCHITECTURAL LIGHTING DESIGN
FOCUS LIGHTING
221 WEST 16TH STREET NEW YORK, NY
10 0 2 6
PHONE: +1 212-865-1565
FAX: +1 212-865-4217
CONTACT: KELLY@FOCUSLIGHTING.COM
PROJECT TITLE:
MANHATTAN WEST
PROJECT ADDRESS:
MANHATTAN WEST
NEW YORK, NY, 10001
WEST 31ST STREET & DYER AVENUE
DATE
NO
ISSUE
16 APR 2014
29 APR 2014
08 JUL 2014
31 JUL 2014
05 SEP 2014
23 OCT 2014
10 OCT 2014
23 OCT 2014
100% DD - UNITS
100% DD COMMENTS
UNITS UPDATE
AMENITIES UPDATE
CD ISSUE
BULLETIN 2
PRINT DATE:
05 SEPTEMBER 2014
SHEET TITLE:
LIGHTING RISER DIAGRAM
DRAWN BY/CHECKED BY:
BB/KH
SHEET NO:
LD
501
LOWER FLOORS
62ND FLOOR
NOT FOR CONSTRUCTION
SCALE: NA
LIGHTING RISER DIAGRAM
REQUIRED CLEARANCES FOR EACH PANEL:
CONTROL INTENT NOTE
THIS DRAWING SHOWS THE INTENT OF THE CONTROL SYSTEM AND MAY BE REVISED BY ADDENDA, CHANGES, FIELD CHANGES, SHOP DRAWINGS, ETC. PRIOR TO COMMENCING INSTALLATION. THE ELECTRICAL CONTRACTOR SHALL VERIFY ALL WIRING WITH THE CONTROL REQUIRED WITH THE CONTROL SYSTEM SUPPLIER.
CONTROL SYSTEM SUPPLIER TO PROVIDE TEMPORARY LAPTOP WITH ETC PASCOM LIGHTSCAPE LIGHTING CONTROL SOFTWARE, ETC SOFTWARE REQUIRED FOR CONTROL SYSTEM SETUP AND OWNER REVIEW.
LIGHTING CONTROL SYSTEM DIMMER RACKS, CENTRAL PROCESSING UNIT, ETHERNET SWITCHES, MAIN BREAKERS, EMERGENCY EQUIPMENT SHALL BE LOCATED WITHIN SAME ELECTRICAL ROOM (EXACT LOCATION TBD BY ELECTRICAL ENGINEER AND ARCHITECT).
RACK DIMENSIONS: 14.5"H X 16.5"D X 45.5"H
EMERGENCY PANEL ETC SENSORS RACK SMART-4 WITH CEPS MODULE DOCUMENT HOLDER (-DH) AND LOCKING DOOR
CONTROL EQUIPMENT SUPPLIER TO CONFIRM QUANTITY OF DIMMERS AND RELAYS REQUIRED ELECTRICAL CHARGES AND CURRENT LIGHTING LOAD SCHEDULE.
TO ARCHITECTURAL LOADS: 2-WIRE CIRCUITS PLUS 3-WIRE CIRCUITS TO SHARED NEUTRALS
MAIN BREAKER BY ELECTRICAL CONTRACTOR
DIMENSIONS: SEE ELECTRICAL ENGINEER'S SPECIFICATIONS
TRANSFER SWITCH TO BE SPECIFIED BY ELECTRICAL ENGINEER.
MAIN FEED BY ELECTRICAL CONTRACTOR
3 PHASE, 4 WIRE + GND 120 / 208 VAC (CONFIRM SIZE WITH ELECTRICAL ENGINEER) 60HZ
TO CEPS (2) 18 WIRES
DMX
DMX DEMULTIPLEXER
120VAC BY ELECTRICAL CONTRACTOR
TO ARCHITECTURAL LOADS: 2-WIRE PLUS GROUND CIRCUITS TO SHARED NEUTRALS
DIMENSIONS: 14"L X 4.75"D X 10.5"H
EBSK - EMERGENCY BYPASS DETECTION KIT
SIGNAL FEED FROM EBSK TO NORMAL RACKS
REFER TO ELECTRICAL ENGINEER'S DRAWINGS FOR EMERGENCY LIGHTING FIXTURE LAYOUT. CONFIRM METHOD OF EMERGENCY LIGHTING WITH ELECTRICAL ENGINEER.
3-PHASE EMERGENCY FEED TO BE SPECIFIED BY ELECTRICAL ENGINEER AND INSTALLED BY ELECTRICAL CONTRACTOR.
MAIN FEED BY ELECTRICAL CONTRACTOR
3 PHASE, 4 WIRE + GND 120 / 208 VAC (CONFIRM SIZE WITH ELECTRICAL ENGINEER) 60HZ
RACK DIMENSIONS: 14.5"H X 22.25"D X 45.5"H
NORMAL PANEL ETC SENSORS SMART-4 WITH CEPS MODULE SENSOR NET TAP DOCUMENT HOLDER (-DH) AND LOCKING DOOR
CONTROL EQUIPMENT SUPPLIER TO CONFIRM QUANTITY OF DIMMERS AND RELAYS REQUIRED ELECTRICAL CHARGES AND CURRENT LIGHTING LOAD SCHEDULE.
MAIN BREAKER BY ELECTRICAL CONTRACTOR
ETC-NET 3
DIMENSIONS: TBD
24-PORT POWER OVER ETHERNET SWITCH IN WALL-MOUNTED ENCLOSURE TO BE FURNISHED BY CONTROL SYSTEM MANUFACTURER.
DIMENSIONS: TBD
ETHERNET SWITCH IN WALL-MOUNTED ENCLOSURE *CONFIRM IF SWITCH IS REQUIRED ON INTERMEDIATE FLOOR TO EXTEND ETHERNET RUN*
ETC LINKCONNECT
DIMENSIONS: 15.5"H X 16.5"D X 8.75"H
120VAC BY ELECTRICAL CONTRACTOR
ER42-H-120 ENCLOSURE WITH:
- P-ACP PROCESSOR
- P-SPM SYSTEM POWER MODULE
- URTO LINSON RJDETHRU OPTION
ETC-NET 3
ETC-NET 3
ETC-NET 3
ETC-NET 3
L1 LOCATION: LOBBY
L2 LOCATION: 6TH RECEPTION
L3 LOCATION: LAUNDRY PAD RECEPTION
LCD TOUCH SCREENS
-MASTER CONTROL STATIONS
- LCD TOUCHSCREEN MOUNTED AT A MINIMUM HEIGHT OF 4'-6" A.F.F.
FINAL LOCATION TO BE APPROVED BY ARCHITECT.
-LCD TOUCH SCREEN TO CONFIGURE AUDIO CONTROL EQUIPMENT SUPPLIER.
P-LCD: TOUCHSCREEN LCD REQUIRES POWER OVER ETHERNET WITH:
- P-LCD-FBS: BACK BOX
- P-LCD-LC: LOCKING COVER
DIMENSIONS: 8.5"H X 5.6"H X 3.25"D (INCLUDING BACKBOX)
BUTTON STATIONS
-BUTTON STATIONS TO BE MOUNTED AT A MINIMUM OF 4'-6" A.F.F. - EXACT HEIGHT TO BE CONFIRMED WITH ARCHITECT BASED ON OTHER SWITCHES AND/OR CONTROL DEVICE
FINAL LOCATION TO BE APPROVED BY ARCHITECT.
UNIVERSAL PUSHBUTTON SCENE SELECTOR WITH:
- SL: SLIDING LOCKING COVER
DIMENSIONS: 2.875"H X 4.5"W X 2.25"D (INCLUDING BACKBOX)
B12 LOCATION: SAUNA
B22 LOCATION: BASKETBALL COURT
B23 LOCATION: CLIMBING WALL
B32 LOCATION: THEATRE
B33 LOCATION: LIBRARY
B34 LOCATION: LOUNGE
B35 LOCATION: LOUNGE
B36 LOCATION: GAME ROOM
B37 LOCATION: GOLF
B38 LOCATION: BASKETBALL COURT
NETWORK JACKS
FEMALE RJ-45 NETWORK PORT FOR PROGRAMMING PURPOSES
FINAL LOCATION TO BE APPROXIMATELY 18" A.F.F. IN CONFERENCE ROOM. EXACT LOCATION, FINAL LOCATION TO BE APPROVED BY ARCHITECT.
ECPB NET/AC 2-GANG PROGRAMMING PORT
DIMENSIONS: 4.55"H X 4.55"W X 2.25"D (INCLUDING BACKBOX)
P11 LOCATION: LOBBY RECEPTION
P12 LOCATION: LOBBY SHOP (TBC)
P21 LOCATION: RECEPTION
P22 LOCATION: BASKETBALL COURT
P3 LOCATION: 62ND FLOOR RECEPTION
P38 LOCATION: BASKETBALL COURT
120VAC BY EC

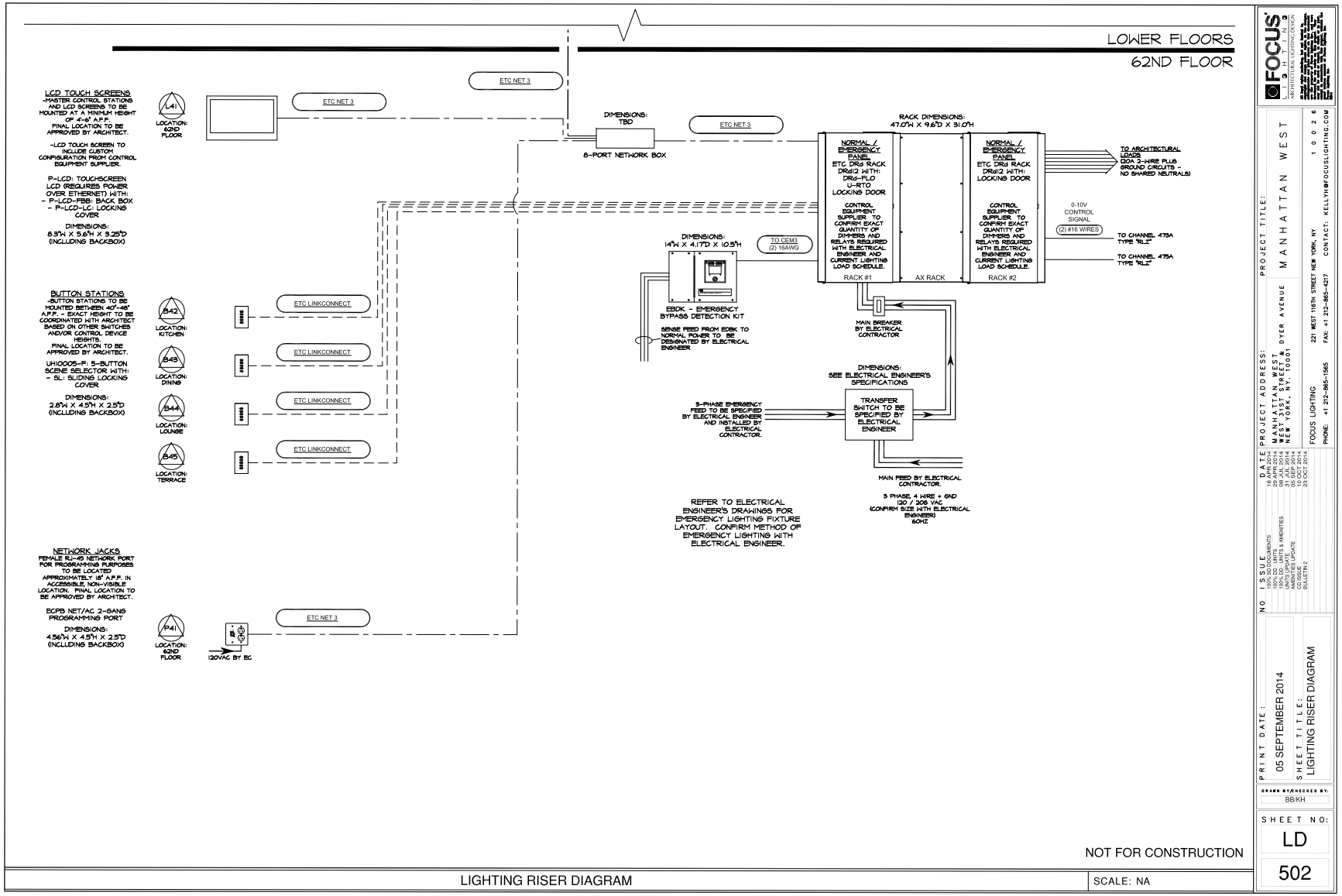

DEPT OF BLDGS121185760 Job Number
ES316345695 Scan Code